OCF Device Specification

VERSION 2.2.7 | November 2023

CONTACT admin@openconnectivity.org

Copyright Open Connectivity Foundation, Inc. © 2023.
All Rights Reserved.

Legal Disclaimer

NOTHING CONTAINED IN THIS DOCUMENT SHALL BE DEEMED AS GRANTING YOU ANY KIND OF LICENSE IN ITS CONTENT, EITHER EXPRESSLY OR IMPLIEDLY, OR TO ANY INTELLECTUAL PROPERTY OWNED OR CONTROLLED BY ANY OF THE AUTHORS OR DEVELOPERS OF THIS DOCUMENT. THE INFORMATION CONTAINED HEREIN IS PROVIDED ON AN "AS IS" BASIS, AND TO THE MAXIMUM EXTENT PERMITTED BY APPLICABLE LAW, THE AUTHORS AND DEVELOPERS OF THIS SPECIFICATION HEREBY DISCLAIM ALL OTHER WARRANTIES AND CONDITIONS, EITHER EXPRESS OR IMPLIED, STATUTORY OR AT COMMON LAW, INCLUDING, BUT NOT LIMITED TO, IMPLIED WARRANTIES OF MERCHANTABILITY OR FITNESS FOR A PARTICULAR PURPOSE. OPEN CONNECTIVITY FOUNDATION, INC. FURTHER DISCLAIMS ANY AND ALL WARRANTIES OF NON-INFRINGEMENT, ACCURACY OR LACK OF VIRUSES.

The OCF logo is a trademark of Open Connectivity Foundation, Inc. in the United States or other countries. *Other names and brands may be claimed as the property of others.

Copyright © 2016-2023 Open Connectivity Foundation, Inc. All rights reserved.

Copying or other form of reproduction and/or distribution of these works are strictly prohibited.

CONTENTS

Introduction vii
1 Scope 1
2 Normative references 1
3 Terms, definitions and abbreviated terms 1
3.1 Terms and definitions 1
3.2 Symbols and abbreviated terms 2
4 Document conventions and organization 2
4.1 Conventions 2
4.2 Notation 2
4.3 Data types 3
4.4 Document structure 3
5 Operational scenarios 4
5.1 Document version 4
6 Core resource model 4
6.1 Introduction 4
6.2 Device type 4
6.3 Profile of ISO/IEC 30118-1 5
6.4 Third (3rd) party specified extensions 6
6.5 Semantic Tags 6
6.5.1 Introduction 6
6.5.2 "tag-pos-desc" or position description Semantic Tag 7
6.5.3 "tag-func-desc" or function description Semantic Tag 7
7 Modelling of multiple logical Devices 7
7.1 Introduction 7
7.2 Single platform model 7
7.3 Multi-platform model 7
7.4 Composite Device model 7
8 Discovery 9
8.1 OCF Endpoint discovery 9
8.2 Resource discovery 9
9 Security 10
Annex A (normative) Device categories and Device Types 11
A.1 Device categories 11
A.2 Device Types 11
Annex B (normative) Smart home Device Types 17
B.1 Smart home required Resources per Device Type 17
B.2 Standardized enumeration values 20
B.2.1 Introduction 20
B.2.2 Alphabetical list of standardized enumeration types 20
B.2.3 Standardized list of supported values for mode Resource Type (oic.r.mode) 27

Copyright Open Connectivity Foundation, Inc. © 2016-2023. All rights Reserved

B.2.4 Standardized list of supported values for operational state Resource Type (oic.r.operational.state) ... 31
B.2.5 Standardized list of supported values for consumable and consumable collection Resource Types (oic.r.consumable, oic.r.consumablecollection) ... 37
B.3 Camera media format (oic.r.media) ... 38
B.4 Additional requirements per Device Type ... 39
B.4.1 Additional requirements for Television Devices ("oic.d.tv") ... 39
Annex C (normative) Healthcare Device Types ... 40
C.1 Scope ... 40
C.2 Introduction to OCF healthcare Devices ... 40
C.3 Operational scenarios ... 40
C.4 Standardized Device Types ... 41
C.4.1 Introduction ... 41
C.4.2 Blood pressure monitor ... 42
C.4.3 Glucose meter ... 43
C.4.4 Body scale ... 44
C.4.5 Body thermometer ... 45
C.4.6 Heart rate monitor ... 46
C.4.7 Pulse oximeter ... 46
C.4.8 Sleep monitor ... 47
C.4.9 Activity tracker ... 48
C.4.10 CGM (Continuous Glucose Meter) ... 49
C.4.11 Cycling power meter ... 50
C.4.12 Cycling speed sensor ... 50
C.4.13 Cycling cadence sensor ... 51
C.4.14 Muscle oxygen monitor ... 51
C.4.15 Body composition analyser ... 52
Annex D (normative) Industrial Device Types ... 54
D.1 Operational scenarios ... 54
D.2 Industrial required resources per Device Type ... 57
Annex E (normative) PV (Photovoltaic) system Device Types ... 58
E.1 Scope ... 58
E.2 Operational scenarios ... 58
E.3 Standard Device Types ... 60
Annex F Annex F (normative) Fire Alarm system Device Types ... 62
F.1 Scope ... 62
F.2 Operational scenarios ... 62
F.3 Standardized Device Types ... 63

Copyright Open Connectivity Foundation, Inc. © 2016-2023. All rights Reserved

Figures

Figure 1 – Device building blocks 4
Figure 2 – Example composite Device model 8
Figure 3 – RETRIEVE Response to example door from composite device model 9
Figure B.1 – Example of mode transitions of a dryer 31
Figure B.2 – Example of job state transitions of a printer 37
Figure C.1 – Schematic diagram of healthcare usages 41
Figure D.1 – Normal process scheme of optical augmented RFID in smart factory environment 55
Figure D.2 – Abnormal process scheme of optical augmented RFID in smart factory environment 56
Figure E.1 – Classification of electrical grid facility 58
Figure E.2 – Typical PV system configuration 59
Figure E.3 – Detailed configuration of PV array system 60
Figure F. 1 – Deployment scenario of the fire alarm system in smart home/building 62
Figure F. 2 – Message call flow example for the fire alarm system 63

Copyright Open Connectivity Foundation, Inc. © 2016-2023. All rights Reserved

Tables

Table 1 – Required Resources for Devices 5
Table 2 – Required Properties in Resource 5
Table 3 – 3rd party defined Resource elements 6
Table A.1 – List of device categories 11
Table A.2 – Per category list of Device Types 11
Table B.1 – Alphabetical list of Device Types ("rt"), including required Resources for smart home 17
Table B.2 – The defined set of standardized enumerations 20
Table B.3 – List of supported "oic.r.mode" values per Device Type ("rt") 28
Table B.4 – List of supported "oic.r.operational.state" values per Device Type ("rt") 31
Table B.5 – List of supported values per Device Type (“rt”) for jobStates of operational state Resource Type 32
Table B.6 – List of defined enumeration values for oic.r.consumable, oic.r.consumablecollection 38
Table B.7 – Recommended media profiles 38
Table C.1 – Alphabetical list of healthcare Device Types 41
Table C.2 – Commonly used Resource Types of healthcare Device Types 42
Table C.3 – Healthcare Device Type of blood pressure monitor 43
Table C.4 – Atomic measurement of blood pressure monitor 43
Table C.5 – Healthcare Device Type of glucose meter 43
Table C.6 – Atomic measurement of glucose meter 43
Table C.7 – Healthcare Device Type of body scale 44
Table C.8 – Atomic measurement type of body scale 44
Table C.9 – Healthcare Device Type of body thermometer 45
Table C.10 – Atomic measurement type of body thermometer 45
Table C.11 – Healthcare Device Type of heart rate monitor 46
Table C.12 – Atomic measurement of heart rate monitor 46
Table C.13 – Healthcare Device Type of pulse oximeter 46
Table C.14 – Atomic measurement of pulse oximeter 47
Table C.15 – Healthcare Device Type of sleep monitor 47
Table C.16 – Atomic measurement of sleep monitor 48
Table C.17 – Healthcare Device Type of activity tracker 48
Table C.18 – Atomic measurement of activity tracker 48
Table C.19 – Healthcare Device Type of CGM 49
Table C.20 – Atomic measurement of CGM 49
Table C.21 – Healthcare Device Type of cycling power meter 50
Table C.22 – Healthcare Device Type of cycling speed sensor 51
Table C.23 – Healthcare Device Type of cycling cadence sensor 51
Table C.24 – Healthcare Device Type of muscle oxygen monitor 51
Table C.25 – Healthcare Device Type of body composition analyser 52

Copyright Open Connectivity Foundation, Inc. © 2016-2023. All rights Reserved

Table C.26 – Atomic measurement type of body composition analyser 52
Table D.1 – Alphabetical list of Device Types ("rt"), including required resources for Industrial..... 57
Table E.1 – Function and required resources for PV system Device Types 60
Table E.2 – List of PV system Device Types..... 60
Table F. 1 – Fire alarm control unit device types 63
Table F. 2 – List of Fire detection Device Types..... 64
Table F. 3 – List of Fire alarm Device Types..... 65

Copyright Open Connectivity Foundation, Inc. © 2016-2023. All rights Reserved

Introduction

This document, and all the other parts associated with this document, were developed in response to worldwide demand for smart home focused Internet of Things (IoT) devices, such as appliances, door locks, security cameras, sensors, and actuators; these to be modelled and securely controlled, locally and remotely, over an IP network.

While some inter-device communication existed, no universal language had been developed for the IoT. Device makers instead had to choose between disparate frameworks, limiting their market share, or developing across multiple ecosystems, increasing their costs. The burden then falls on end users to determine whether the products they want are compatible with the ecosystem they bought into, or find ways to integrate their devices into their network, and try to solve interoperability issues on their own.

In addition to the smart home, IoT deployments in commercial environments are hampered by a lack of security. This issue can be avoided by having a secure IoT communication framework, which this standard solves.

The goal of these documents is then to connect the next 25 billion devices for the IoT, providing secure and reliable device discovery and connectivity across multiple OSs and platforms. There are multiple proposals and forums driving different approaches, but no single solution addresses the majority of key requirements. This document and the associated parts enable industry consolidation around a common, secure, interoperable approach.

The OCF specification suite is made up of nineteen discrete documents, the documents fall into logical groupings as described herein:

- Core framework
  - Core Specification
  - Security Specification
  - Onboarding Tool Specification
- Bridging framework and bridges
  - Bridging Specification
  - Resource to Alljoyn Interface Mapping Specification
  - OCF Resource to oneM2M Resource Mapping Specification
  - OCF Resource to BLE Mapping Specification
  - OCF Resource to EnOcean Mapping Specification
  - OCF Resource to LWM2M Mapping Specification
  - OCF Resource to UPlus Mapping Specification
  - OCF Resource to Zigbee Cluster Mapping Specification
  - OCF Resource to Z-Wave Mapping Specification
- Resource and Device models
  - Resource Type Specification
  - Device Specification
- Core framework extensions
  - Easy Setup Specification
  - Core Optional Specification
- OCF Cloud
  - Cloud API for Cloud Services Specification

Copyright Open Connectivity Foundation, Inc. © 2016-2023. All rights Reserved

- Device to Cloud Services Specification
- Cloud Security Specification

OCF Device Specification

1 Scope

The Device definitions use Resource definitions from ISO/IEC 30118-4.

This document is built on top of ISO/IEC 30118-1. ISO/IEC 30118-1 specifies the core architecture, interfaces protocols and services to enable the implementation of profiles for IoT usages and ecosystems. ISO/IEC 30118-1 also defines the main architectural components of network connectivity, discovery, data transmission, device & service management and ID & security. The core architecture is scalable to support simple devices (constrained devices) and more capable devices (smart devices).

2 Normative references

The following documents are referred to in the text in such a way that some or all of their content constitutes requirements of this document. For dated references, only the edition cited applies. For undated references, the latest edition of the referenced document (including any amendments) applies.

ISO/IEC 30118-1, Information technology -- Open Connectivity Foundation (OCF) Specification -- Part 1: Core specification
https://www.iso.org/standard/53238.html
Latest version available at: https://openconnectivity.org/specs/OCF_Core_Specification.pdf

ISO/IEC 30118-2, Information technology -- Open Connectivity Foundation (OCF) Specification -- Part 2: Security specification
https://www.iso.org/standard/74239.html
Latest version available at: https://openconnectivity.org/specs/OCF_Security_Specification.pdf

ISO/IEC 30118-4, Information technology -- Open Connectivity Foundation (OCF) Specification -- Part 4: Resource type specification
https://www.iso.org/standard/74241.html
Latest version available at:
https://openconnectivity.org/specs/OCF_Resource_Type_Specification.pdf

ISO/IEC 61850-7-1, Communication networks and systems for power utility automation --Part 7-1: Basic communication structure -- Principles and models
https://webstore.iec.ch/publication/6014

OpenAPI specification, fka *Swagger RESTful API Documentation Specification*, Version 2.0
https://github.com/OAI/OpenAPI-Specification/blob/master/versions/2.0.md

IETF RFC 4566, SDP: Session Description Protocol, July 2006
https://tools.ietf.org/html/rfc4566

Draft Report: A Basic Classification System for Energy-Using Products--Universal Device Classification, December 2013
https://eta-intranet.lbl.gov/sites/default/files/lbnl-classification-v1.pdf

3 Terms, definitions and abbreviated terms

3.1 Terms and definitions

For the purposes of this document, the terms and definitions given in ISO/IEC 30118-1 and ISO/IEC 30118-2 and the following apply.

Copyright Open Connectivity Foundation, Inc. © 2016-2023. All rights Reserved

ISO and IEC maintain terminological databases for use in standardization at the following addresses:

– ISO Online browsing platform: available at https://www.iso.org/obp

– IEC Electropedia: available at http://www.electropedia.org/

3.1.1
Actuator
Resource with support of the UPDATE operation.

3.1.2
Sensor
Resource without support of the UPDATE operation.

3.1.3
Healthcare Device
Device that is conformant to the normative requirements contained in Annex C of this document.

3.2 Symbols and abbreviated terms

CGM	Continuous Glucose Monitor
CRUDN	Create Retrieve Update Delete Notify
CSV	Comma Separated Value
NREM	Non Rapid Eye Movement
REM	Rapid Eye Movement
REST	Representational State Transfer
SDP	Session Description Protocol
UDC	Universal Device Classification

4 Document conventions and organization

4.1 Conventions

In this document a number of terms, conditions, mechanisms, sequences, parameters, events, states, or similar terms are printed with the first letter of each word in uppercase and the rest lowercase (e.g., Network Architecture). Any lowercase uses of these words have the normal technical English meaning.

In this document, to be consistent with the IETF usages for RESTful operations, the RESTful operation words CRUDN, CREATE, RETRIVE, UPDATE, DELETE, and NOTIFY will have all letters capitalized. Any lowercase uses of these words have the normal technical English meaning.

4.2 Notation

In this document, features are described as required, recommended, allowed or DEPRECATED as follows:

Required (or shall or mandatory).

These basic features shall be implemented. The phrases "shall not", and "PROHIBITED" indicate behaviour that is prohibited, i.e. that if performed means the implementation is not in compliance.

Recommended (or should).

Copyright Open Connectivity Foundation, Inc. © 2016-2023. All rights Reserved

These features add functionality supported by a Device and should be implemented. Recommended features take advantage of the capabilities a Device, usually without imposing major increase of complexity. Notice that for compliance testing, if a recommended feature is implemented, it shall meet the specified requirements to be in compliance with these guidelines. Some recommended features could become requirements in the future. The phrase "should not" indicates behaviour that is permitted but not recommended.

Allowed (or allowed).

These features are neither required nor recommended by a Device, but if the feature is implemented, it shall meet the specified requirements to be in compliance with these guidelines.

Conditionally allowed (CA).

The definition or behaviour depends on a condition. If the specified condition is met, then the definition or behaviour is allowed, otherwise it is not allowed.

Conditionally required (CR).

The definition or behaviour depends on a condition. If the specified condition is met, then the definition or behaviour is required. Otherwise the definition or behaviour is allowed as default unless specifically defined as not allowed.

DEPRECATED

Although these features are still described in this document, they should not be implemented except for backward compatibility. The occurrence of a deprecated feature during operation of an implementation compliant with the current document has no effect on the implementation's operation and does not produce any error conditions. Backward compatibility may require that a feature is implemented and functions as specified but it shall never be used by implementations compliant with this document.

Strings that are to be taken literally are enclosed in "double quotes".

Words that are emphasized are printed in *italic*.

4.3 Data types

See ISO/IEC 30118-1.

4.4 Document structure

This document describes specific requirements governing the indication of Device Types on Devices and the requirements that are associated with specific Device Types themselves. The document makes use of functionality defined in the ISO/IEC 30118-1 and ISO/IEC 30118-4.

Annex A specifies the Device Types that shall be used by an OCF Device.

Annex B specifies the profiles that that shall be used by an OCF Device that is part of the Smart Home vertical.

Annex C specifies the profiles that shall be used by an OCF Device that is part of the Healthcare vertical.

Annex D specifies the profiles that shall be used by an OCF Device that is part of the Industrial vertical.

Annex E specifies the profiles that shall be used by an OCF Device that is part of a Photovoltaic system.

Copyright Open Connectivity Foundation, Inc. © 2016-2023. All rights Reserved

This document further describes which constructs are used for a Device and which Resources are mandated to be implemented for each Device. A typical Device consisting of data elements defined in the referenced documents is depicted in Figure 1.

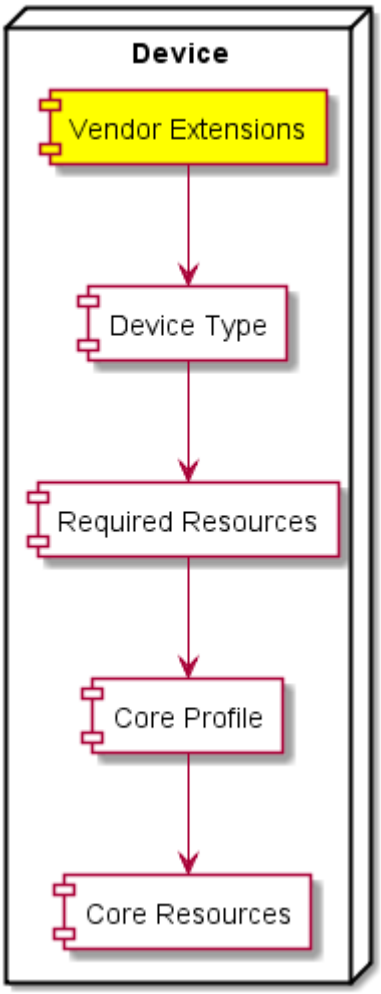

Figure 1 – Device building blocks

5 Operational scenarios

5.1 Document version

All Devices conformant to this document shall add the string "ocf.sh.1.3.0" to the dmv Property in oic.wk.d. This Property is for legacy Device support only and will no longer be revised in alignment with document versions.

6 Core resource model

6.1 Introduction

The Core Resource model is described in ISO/IEC 30118-1.

6.2 Device type

A Device Type is a specialisation of a Resource Type name, it is used to populate the "rt" Property of "/oic/d" and thus provide an indicator of the type of physical device that is being modelled by the

Copyright Open Connectivity Foundation, Inc. © 2016-2023. All rights Reserved

Server. All The Device Types defined by this document are have a Resource Type name ("rt") prefixed with "oic.d."

Examples of Device Types are:

– oic.d.fan

– oic.d.thermostat

The full list of defined Device names and types are in Table A.2, Annex B, Annex C, Annex D, and Annex E detail the minimal Resource(s) that a Device shall implement for a specific Device Type where required by a vertical. A Device may expose additional OCF and 3rd party defined Resources other than those indicated in these Annexes.

ISO/IEC 30118-1 defines a Device Resource with a URI of "/oic/d". A Device shall include in the "Resource Type" Property of "/oic/d" the Device Type (or Device Types) from Table A.2, or a Third party specified Device Type (see clause 6.4), of the physical device hosting the Server; the inclusion of the Device Type shall be done using one of the methods provided by clause 11.3.4 of ISO/IEC 30118-1 (i.e. add to the array of values).

ISO/IEC 30118-1 supports the inclusion of a Device Type as part of the Resource Type of a Collection (see also clause 7.4), in such cases the Collection shall include the Resource Types defined as mandatory for the Device Type by this document. For example, if a Collection Resource has an "rt" value of ["oic.d.light"], the Collection includes an instance of "oic.r.switch.binary" which is mandatory for an "oic.d.light" as per clause B.1.

Therefore a Device may be discovered by adding a query for the "rt" of the Device Type itself (e.g. "?rt=oic.d.fan") to the multicast OCF Endpoint discovery method (see clause 8.1).

6.3 Profile of ISO/IEC 30118-1

This clause describes the profiling of the Core Resources and transport mechanisms and functions that are defined in ISO/IEC 30118-1.

The required ISO/IEC 30118-1 Resources are also required for a profile implementation.

In addition to the required Resources the optional ISO/IEC 30118-1 Resources in Table 1 shall be required.

Table 1 – Required Resources for Devices

Resource ("rt")	Required in Profile
Intentionally left blank	Intentionally left blank

For each of the Resources listed in Table 1, Table 2 details the Properties within those Resources that shall be required.

Table 2 – Required Properties in Resource

Resource ("rt")	Property name	Required in Profile
Intentionally left blank	Intentionally left blank	Intentionally left blank

A Device shall support CoAP based OCF Endpoint discovery as defined in clause 10.3 of ISO/IEC 30118-1.

The messaging protocol for a Device shall be CoAP (see ISO/IEC 30118-1).

A Device shall support a network layer as defined in clause 9 of ISO/IEC 30118-1 including any necessary defined bridging functions that ensure inter-operability with IPv6.

Copyright Open Connectivity Foundation, Inc. © 2016-2023. All rights Reserved

6.4 Third (3rd) party specified extensions

This clause describes how a 3rd party may add Device Types, Resource Types, 3rd party defined Properties to an existing or 3rd party defined Resource Type, 3rd party defined enumeration values to an existing enumeration and 3rd party defined Parameters to an existing defined Property.

A 3rd party may specify additional (non-OCF) Resources within an OCF Device. A 3rd party may also specify additional Properties within an existing OCF defined Resource Type. Further a 3rd party may extend an OCF defined enumeration with 3rd party defined values.

A 3rd party defined Device Type may expose both 3rd party and OCF defined Resource Types. A 3rd party defined Device Type must expose the mandatory Resources for all OCF Devices defined within this document.

A 3rd party defined Resource Type shall include any mandatory Properties defined in this document and also any vertical specified mandatory Properties. All Properties defined within a 3rd party defined Resource Type that are part of the OCF namespace that are not Common Properties as defined in this document shall follow the 3rd party defined Property rules in Table 3.

Table 3 defines the syntax rules for 3rd party defined Resource Type elements. Within the table the term "Domain_Name" refers to a domain name that is owned by the 3rd party that is defining the new element.

Table 3 – 3rd party defined Resource elements

	Resource Element	Vendor Definition Rules
New 3rd party defined Device Type	"rt" Property Value of "/oic/d"	"x.<Domain_Name>.<Resource identification>"
New 3rd party defined Resource Type	"rt" Property Value	"x.<Domain_Name>.<Resource identification>"
New 3rd party defined Property within the OCF namespace	Property Name	"x.<Domain_Name>.<Property>"
Additional 3rd party defined values in an OCF specified enumeration	Enumeration Property Value	"x.<Domain_Name>.<enum value>"
Additional 3rd party defined Parameter in an OCF specified Property	Parameter key word	x.<Domain_Name>.<parameter keyword>

With respect to the use of the Domain_Name in this scheme the labels are reversed from how they appear in DNS or other resolution mechanisms. The 3rd party defined Device Type and Resource Type otherwise follow the rules defined in ISO/IEC 30118-1. 3rd party defined Resource Types should be registered in the IANA Constrained RESTful Environments (CoRE) Parameters registry.

For example:

```
x.com.samsung.galaxyphone.accelerator
x.com.cisco.ciscorouterport
x.com.hp.printerhead
x.org.allseen.newinterface.newproperty
```

6.5 Semantic Tags

6.5.1 Introduction

Semantic Tags are meta-information associated with a specific Resource instance that are represented as both Link Parameters and Resource Properties that provide a mechanism whereby the Resource be annotated with additional contextual metadata that helps describe the Resource. The requirements are defined in ISO/IEC 30118-1, but clauses 6.5.2 and 6.5.3 define additional Device specific requirements.

Copyright Open Connectivity Foundation, Inc. © 2016-2023. All rights Reserved

6.5.2 "tag-pos-desc" or position description Semantic Tag

In addition to the requirements defined in ISO/IEC 30118-1 the following requirements will apply:

– This Semantic Tag should not contain any 3rd party defined values (see clause 6.4).

6.5.3 "tag-func-desc" or function description Semantic Tag

In addition to the requirements defined in ISO/IEC 30118-1 the following requirements will apply:

– This Semantic Tag when exposed shall be populated with a value from the currently supported set of standardized enumeration values defined in clause B.2.2.
– This Semantic Tag should not contain any 3rd party defined values (see clause 6.4).

7 Modelling of multiple logical Devices

7.1 Introduction

A physical Device may be modelled as a single Platform and Device, a single Platform with multiple Devices, multiple separately discoverable discrete Platforms and Devices, or as a single Platform and Device where the Device is represented as a composition of other Devices.

For example, a door that includes the functionality of a contact sensor, a lock and a camera may be modeled as a single-Platform, a multi-Platform, or a Composite Device. Each of these three options will be detailed in clauses 7.2, 7.3, and 7.4.

7.2 Single platform model

The physical Device exposes one or more logical Devices that are independently discoverable (i.e. they separately respond to multicast discovery request messages as defined in clause 11.3 of ISO/IEC 30118-1). Given the door example there could be a single discovery response with an instance of "/oic/d" that exposes a single Device Type (such as "oic.d.door") or multiple discovery responses, each response having a single Device Type in the "rt" of "/oic/d" that represents the logical Device. The common denominator being that for all discovered logical Devices the Properties of "/oic/p" have the same values.

7.3 Multi-platform model

Just like the single-Platform model, one or more logical Devices that make up a physical Device respond independently to multicast discovery request messages and expose their own Resources. Like the single-platform model, each logical Device exposes a single Device Type in the "rt" value of "/oic/d". The difference from the single-platform model is that each logical Device does not have the same values for the Properties of "oic/p".

7.4 Composite Device model

When modelling a Server as a Composite Device there shall be a single Platform which represents the Composite Device. The Resource Type Property Value of "/oic/d" exposed should contain all of the Device Types of the Devices that compose the Composite Device. For each Device that is part of the Composite Device when using this approach there shall exist a Collection that represents one of the distinct Devices in the composition. Further each Collection shall have a Resource Type that at a minimum includes the Device Type that the Collection represents (e.g. ["oic.d.door"]).

Figure 2 illustrates the response to a discovery request using the baseline Interface on "/oic/res" for a Composite Device modeled as described in this clause. Figure 3 illustrates the response to a unicast RETRIEVE request using the baseline Interface to the Collection that represents the door Device.

Copyright Open Connectivity Foundation, Inc. © 2016-2023. All rights Reserved

```
[
 {
  "rt": ["oic.wk.res"],
  "if": ["oic.if.baseline", "oic.if.ll" ],
  "links":
   [
    {
     "anchor": "ocf://dc70373c-1e8d-4fb3-962e-017eaa863989",
     "href": "/oic/d",
     "rt":   ["oic.wk.d","oic.d.door","oic.d.sensor","oic.d.lock","oic.d.camera"],
     "if":   ["oic.if.r","oic.if.baseline"],
     "p":    {"bm": 3},
     "eps": [{"ep": "coap://[fe80::b1d6]:1111"}]
    },
    {
     "anchor": "ocf://dc70373c-1e8d-4fb3-962e-017eaa863989",
     "href": "/mydevice/mydoor",
     "rt":   ["oic.d.door"],
     "if":   ["oic.if.ll","oic.if.baseline","oic.if.r"],
     "p":    {"bm": 3},
     "eps": [{"ep": "coaps://[fe80::b1d6]:1111"}]
    },
    {
     "anchor": "ocf://dc70373c-1e8d-4fb3-962e-017eaa863989",
     "href": "/mydevice/mysensor",
     "rt":   ["oic.d.sensor"],
     "if":   ["oic.if.ll","oic.if.baseline","oic.if.r"],
     "p":    {"bm": 3},
     "eps": [{"ep": "coaps://[fe80::b1d6]:1111"}]
    },
    {
     "anchor": "ocf://dc70373c-1e8d-4fb3-962e-017eaa863989",
     "href": "/mydevice/mylock",
     "rt":   ["oic.d.lock"],
     "if":   ["oic.if.ll","oic.if.baseline","oic.if.r"],
     "p":    {"bm": 3},
     "eps": [{"ep": "coaps://[fe80::b1d6]:1111"}]
    },
    {
     "anchor": "ocf://dc70373c-1e8d-4fb3-962e-017eaa863989",
     "href": "/mydevice/mycamera",
     "rt":   ["oic.d.camera"],
     "if":   ["oic.if.ll","oic.if.baseline","oic.if.r"],
     "p":    {"bm": 3},
     "eps": [{"ep": "coaps://[fe80::b1d6]:1111"}]
    }
   ]
 }
]
```


Figure 2 – Example composite Device model

Copyright Open Connectivity Foundation, Inc. © 2016-2023. All rights Reserved

```
{
"rt": ["oic.d.door"],
"if": ["oic.if.ll","oic.if.r","oic.if.baseline"],
  "id": "unique_example_id",
  "di":   "dc70373c-1e8d-4fb3-962e-017eaa863989",
  "icv":  "ocf.1.3.0",
  "dmv":  "ocf.res.1.3.0, ocf.sh.1.3.0",
  "piid": "6F0AAC04-2BB0-468D-B57C-16570A26AE48",
  "links": [
   {
     "href": "/mydoor/openlevel",
     "rt":   ["oic.r.openlevel"],
     "if":   ["oic.if.a", "oic.if.baseline"],
      "p": {"bm": 2},
     "eps": [
       {"ep": "coaps://[fe80::b1d6]:1122"}
     ]
   }
  ]
}
```


Figure 3 – RETRIEVE Response to example door from composite device model

8 Discovery

8.1 OCF Endpoint discovery

Clients may discover Servers by using the mechanisms defined by ISO/IEC 30118-1 clause 10. A Client may populate an "rt" query parameter with the Device Types that the Client wants to discover, or if no "rt" query parameter is provided then the search is for all available Device Types irrespective.

Devices may be discovered by Device Type or implemented Resource Type. This difference is conveyed by the population of any "rt" query parameter included as part of discovery (see clause 11.3 of ISO/IEC 30118-1).

The values that may be used for discovering a specific Device Type are listed in Table A.2. The values that may be used to discover a specific Resource Type are listed in clause 6 of ISO/IEC 30118-4.

The discovery process provides the base URI of the Device that is acting as a Server to the Client. The structure of the detected Device can then be retrieved by Resource Discovery.

8.2 Resource discovery

Clause intentionally left blank

Copyright Open Connectivity Foundation, Inc. © 2016-2023. All rights Reserved

9 Security

A Device shall implement the mandated Security Virtual Resources specified in the ISO/IEC 30118-2. Additionally, all exposed ISO/IEC 30118-4 defined Resources shall be accessible via at least one secure OCF Endpoint . A Device shall not expose ISO/IEC 30118-4 defined Resources using unsecured OCF Endpoints. For the purposes of this document a secure OCF Endpoint is one that either uses a scheme locator of "coaps" or "coaps+tcp" in the "eps" Parameter exposed by "/oic/res", or one that provides a Simple Secure Multicast address in the "eps" Parameter exposed by "/oic/res" (see ISO/IEC 30118-2).

With the exception of those Resources related to Discovery that are explicitly identified by the ISO/IEC 30118-1 as not requiring secured access (see ISO/IEC 30118-1 clause 11.2.3), all other Resources defined in ISO/IEC 30118-1 implemented in the Device shall be accessible via at least one secure OCF Endpoint (i.e. use of a "coaps" or "coaps+tcp" scheme locator within the "eps" Parameter exposed by /oic/res). Similarly, any Resources defined in ISO/IEC 30118-1 that do not require unsecured access that are not listed in /oic/res shall also be accessible via "coaps" or "coaps+tcp".

Copyright Open Connectivity Foundation, Inc. © 2016-2023. All rights Reserved

Annex A
(normative)

Device categories and Device Types

A.1 Device categories

Devices are grouped into Device Categories based on the Universal Device Classification (UDC) (see A Basic Classification System for Energy-Using Products--Universal Device Classification), all Device Categories are listed in Table A.1.

Table A.1 – List of device categories

Device Category Name	Description
Space Conditioning	Heating and cooling systems
Lighting	
Appliance	Also known as "white goods"; covers major appliances only.
Electronics	Personal electronics
Miscellaneous	Small appliances, other
Infrastructure	Physical building and infrastructure
Transportation	Vehicles, fixed devices that provide movement (e.g. Escalators)
Fitness	Includes lifestyle
Medical	
Personal Health	
Other	

A.2 Device Types

The complete Universal Device Classification with Device Types per Device Category is provided in Table A.2. Note that not all Devices within the UDC classification have equivalent OCF defined Device Types. All defined Device Types are of the form "oic.d.<thing>" where <thing> is a single alphanumeric string (lower case [a..z],[0..9] only) no more than 24 characters in length giving a total maximum length of the Device Type of 32 characters. Where an abbreviated form of the Device Type is required (applicable only to population of a Wi-Fi beacon IE) then the "oic.d." portion of the Device Type may be omitted.

Table A.2 does not specify the mandatory Resources that are implemented by an instance of such a Device Type; the set of applicable mandatory Resources is dependent on the application domain. In this document the following domains are specified: Smart Home, Healthcare. The "Reference" column in the table references vertical specific annexes where the Device Type is further refined (e.g. mandatory Resources).

Table A.2 – Per category list of Device Types

Device Category Name	UDC Device Name	Device Name	Device Type (Normative)	Reference
Space Conditioning	Unitary System	Air Conditioner	oic.d.airconditioner	B.1
	Boiler	Water Heater	oic.d.waterheater	B.1
	Furnace	Furnace	oic.d.furnace	

Copyright Open Connectivity Foundation, Inc. © 2016-2023. All rights Reserved

	Pump	Pump	oic.d.pump	
	Fan	Fan	oic.d.fan	B.1
	Condensing Unit	Condensing Unit	oic.d.condensingunit	
	Condenser	Condenser	oic.d.condenser	
	Humidifier	Humidifier	oic.d.humidifier	B.1
	Dehumidifier	Dehumidifier	oic.d.dehumidifier	B.1
	HVAC – Control	Thermostat	oic.d.thermostat	B.1
	HVAC - Other	HVAC	oic.d.hvac	
		Air Purifier	oic.d.airpurifier	B.1
		Air Quality Monitor	oic.d.airqualitymonitor	B.1
Lighting	Lighting - Controls	Lighting Controls	oic.d.lightingcontrol	
	Lighting - Other	Light	oic.d.light	B.1
		DALI Application Controller	oic.d.dali.ac	B.1
		DALI Bus	oic.d.dali.bus	B.1
		DALI Device	oic.d.dali	B.1
		Smart Light	oic.d.light.smart,oic.d.light [1]	B.1
Appliance	Airer	Airer	oic.d.airer	B.1
	Air Conditioner Assistant	Air Conditioner Assistant	oic.d.acassistant	B.1
	Clothes Dryer	Dryer (Laundry)	oic.d.dryer	B.1
	Clothes Washer	Washer (Laundry)	oic.d.washer	B.1
		Clothes Washer Dryer	oic.d.washerdryer	B.1
	Dishwasher	Dishwasher	oic.d.dishwasher	B.1
	Freezer	Freezer	oic.d.freezer	B.1
	Ice Machine	Ice Machine	oic.d.icemachine	
	Indoor Garden	Indoor Garden	oic.d.indoorgarden	B.1
	Mattress	Mattress	oic.d.mattress	B.1
	Oven	Oven	oic.d.oven	B.1
	Range	Range	oic.d.range	
	Refrigerator	Refrigerator	oic.d.refrigerator	B.1
	Water Heater	Water Heater	oic.d.waterheater	B.1
	Water Purifier	Water Purifier	oic.d.waterpurifier	B.1

[1] Any Device that exposes a Device Type of "oic.d.light.smart" shall also expose a Device Type of "oic.d.light". In essence a Smart Light is also a Light, and will be treated as such by any Client that only understands "oic.d.light".

Copyright Open Connectivity Foundation, Inc. © 2016-2023. All rights Reserved

	Appliance – Other	Cooker Hood	oic.d.cookerhood	B.1
		Cooktop	oic.d.cooktop	B.1
		Steam Closet	oic.d.steamcloset	B.1
Electronics	Audio System	Audio System	oic.d.audiosystem	
	A/V Player	AV Player	oic.d.avplayer	
	Camera	Camera	oic.d.camera	B.1
	Computer – Desktop	Desktop PC	oic.d.desktoppc	
	Computer - Notebook	Notebook PC	oic.d.notebookpc	
	Computer - Server	Server	oic.d.server	
	Computer – Other	Computer	oic.d.pc	
	Data Storage	Data Storage Unit	oic.d.datastorageunit	
	Display	Display	oic.d.display	
	Electronics - Portable	Portable Electronics	oic.d.portableelectronics	
	Game Console	Game Console	oic.d.gameconsole	
	Imaging Equipment	3D Printer	oic.d.3dprinter	B.1
		Printer	oic.d.printer	B.1
		Printer Multi-Function	oic.d.multifunctionprinter	B.1
		Scanner	oic.d.scanner	B.1
	Musical Instrument	Musical Instrument	oic.d.musicalinstrument	
	Networking Equipment	Networking Equipment	oic.d.networking	
	Phone Handset	Handset	oic.d.handset	
	Receiver	Receiver	oic.d.receiver	B.1
	Set Top Box	Set Top Box	oic.d.stb	B.1
	Telephony	Telephony	oic.d.telephonydevice	
	Television	Television	oic.d.tv	B.1, B.4.1
	A/V - Other	Active Speaker	oic.d.speaker	
	Electronics – Other	Electronics	oic.d.smallelectrical	
Miscellaneous	Air Compressors	Air Compressor	oic.d.aircompressor	
	Bathroom Device	Bathroom General	oic.d.bathroomdevice	
	Battery Charger	Battery Charger	oic.d.batterycharger	

Copyright Open Connectivity Foundation, Inc. © 2016-2023. All rights Reserved

	Business Equipment	Business Equipment	oic.d.businessequipment	
	Cleaning Equipment	Robot Cleaner	oic.d.robotcleaner	B.1
	Cooking – Portable	Portable Stove	oic.d.portablestove	
	Exercise Machine	Exercise Machine	oic.d.exercisemachine	
	HVAC – Portable	Portable HVAC	oic.d.hvacportable	
	Industrial	Optical augmented RFID Reader	oic.d.orfid	D.1
	Kitchen	Coffee Machine	oic.d.coffeemachine	B.1
		Food Probe	oic.d.foodprobe	B.1
		Grinder	oic.d.grinder	B.1
		Kettle	oic.d.kettle	B.1
	Lighting – Decorative	Decorative Lighting	oic.d.lightdecorative	
	Lighting – Emergency	Emergency Lighting	oic.d.lightemergency	
	Microwave Oven	Microwave Oven	oic.d.microwave	B.1
	Vending Machine	Vending Machine	oic.d.vendingmachine	
	Water Dispenser	Water Dispenser	oic.d.waterdispenser	
	Miscellaneous - Other	Battery	oic.d.battery	B.1, E.3
Infrastructure	Breakers	Water Valve	oic.d.watervalve	B.1
	Control	Wallpad	oic.d.wallpad	B.1
	Doors/Windows	Blind	oic.d.blind	B.1
		Door	oic.d.door	B.1
		Garage Door	oic.d.garagedoor	B.1
		Smart Lock	oic.d.smartlock	B.1
		Window	oic.d.window	B.1
	Fireplace	Fireplace	oic.d.fireplace	
	Pump	Pump	oic.d.pump	
	Power - Portable	Energy Generator	oic.d.energygenerator	B.1
		Smart Plug	oic.d.smartplug	B.1
	Power - Fixed	Arc Fault Circuit Interrupter	oic.d.afci	B.1
		Circuit Breaker	oic.d.circuitbreaker	E.3

Copyright Open Connectivity Foundation, Inc. © 2016-2023. All rights Reserved

		Ground Fault Circuit Interrupter	oic.d.gfci	B.1
		Inverter	oic.d.inverter	E.3
		PV Array System	oic.d.pvarraysystem	E.3
		Switch	oic.d.switch	B.1
	Security	Security Panel	oic.d.securitypanel	B.1
	Sensors	Generic Sensor	oic.d.sensor	B.1
	Meter	Electric Meter	oic.d.electricmeter	B.1
		Energy Monitor	oic.d.energymonitor	B.1
Transportation	Transport - Other	Electric Vehicle Charger	oic.d.electricvehiclecharger	B.1
Fitness		Fitness Device	oic.d.fitnessdevice	
		Activity Tracker	oic.d.activitytracker	C.4
		Blood Pressure Monitor	oic.d.bloodpressuremonitor	C.4
		Body Thermometer	oic.d.bodythermometer	C.4
		Cycling Power Meter	oic.d.cyclingpowermeter	C.4
		Cycling Speed Sensor	oic.d.cyclingspeedsensor	C.4
		Cycling Cadence Sensor	oic.d.cyclingcadencesensor	C.4
		Heart Rate Monitor	oic.d.heartratemonitor	C.4
		Muscle Oxygen Monitor	oic.d.muscleoxygenmonitor	C.4
Medical		Blood Pressure Monitor	oic.d.bloodpressuremonitor	C.4
		Body Scale	oic.d.bodyscale	C.4
		Body Thermometer	oic.d.bodythermometer	C.4
		CGM	oic.d.cgm	C.4
		Glucose Meter	oic.d.glucosemeter	C.4
		Heart Rate Monitor	oic.d.heartratemonitor	C.4
		Medical Device	oic.d.medicaldevice	
		Pulse Oximeter	oic.d.pulseoximeter	C.4
		Sleep Monitor	oic.d.sleepmonitor	C.4
Personal Health		Activity Tracker	oic.d.activitytracker	C.4

Copyright Open Connectivity Foundation, Inc. © 2016-2023. All rights Reserved

		Blood Pressure Monitor	oic.d.bloodpressuremonitor	C.4
		Body Composition Analyser	oic.d.bodycompositionanalyser	C.4
		Body Scale	oic.d.bodyscale	C.4
		Body Thermometer	oic.d.bodythermometer	C.4
		CGM	oic.d.cgm	C.4
		Glucose Meter	oic.d.glucosemeter	C.4
		Heart Rate Monitor	oic.d.heartratemonitor	C.4
		Personal Health Device	oic.d.personalhealthdevice	
		Pulse Oximeter	oic.d.pulseoximeter	C.4
		Sleep Monitor	oic.d.sleepmonitor	C.4
Other	Other		oic.d.unknown	
		Access Management Service	oic.d.ams	
		Credential Management Service	oic.d.cms	
		Device Ownership Transfer Service	oic.d.dots	

Copyright Open Connectivity Foundation, Inc. © 2016-2023. All rights Reserved

Annex B
(normative)

Smart home Device Types

B.1 Smart home required Resources per Device Type

Device Types may mandate that specific Resources be implemented. The required Resource per Device Type where mandated is listed in Table B.1. Additionally, specific Resources that use enumeration values to indicate supported states or modes may mandate usage of standardized enumeration values. The mandated allowed values are indicated for each applicable Resource Type, the Property of interest on that Resource Type and to which Device Type it applies.

Per Table B.1, some Device types support two instances of the same Resource Type. When this is the case, the Resources shall support different CRUDN actions, e.g. one Resource acts as a Sensor (CRUDN action write not supported) and the other Resource acts as an Actuator (CRUDN actions read and write supported at a minimum) unless otherwise specified.

Table B.1 – Alphabetical list of Device Types ("rt"), including required Resources for smart home

Device Name (informative)	Device Type ("rt") (Normative)	Required Resource name	Required Resource Type
3D Printer	oic.d.3dprinter	Binary Switch	oic.r.switch.binary
		3D Printer	oic.r.printer.3d
		Operational State	oic.r.operational.state
		Temperature	oic.r.temperature
		Print Queue	oic.r.printer.queue
Active Speaker	oic.d.speaker	Binary Switch	oic.r.switch.binary
		Audio Controls	oic.r.audio
Airer	oic.d.airer	Binary Switch	oic.r.switch.binary
		Linear Movement Controls	oic.r.movement.linear
Air Conditioner	oic.d.airconditioner	Binary Switch	oic.r.switch.binary
		Temperature	oic.r.temperature
Air Conditioner Assistant	oic.d.acassistant	Binary Switch	oic.r.switch.binary
		Vendor List	oic.r.vendorlist
Air Purifier	oic.d.airpurifier	Binary Switch	oic.r.switch.binary
Air Quality Monitor	oic.d.airqualitymonitor	Air Quality Collection	oic.r.airqualitycollection
Arc Fault Circuit Interrupter	oic.d.afci	Fault Interrupter Switch	oic.r.switch.fault
Battery	oic.d.battery	Battery	oic.r.battery
Blind	oic.d.blind	Open Level	oic.r.openlevel
Camera	oic.d.camera	Media	oic.r.media
Clothes Washer Dryer	oic.d.washerdryer	Binary Switch	oic.r.switch.binary
		Operational State	oic.r.operational.state
Coffee Machine	oic.d.coffeemachine	Binary Switch	oic.r.switch.binary

Copyright Open Connectivity Foundation, Inc. © 2016-2023. All rights Reserved

		Operational State	oic.r.operational.state
Cooker Hood	oic.d.cookerhood	Airflow Control	oic.r.airflowcontrol
		Binary Switch	oic.r.switch.binary
		Mode	oic.r.mode
Cooktop	oic.d.cooktop	Heating Zone Collection	oic.r.heatingzonecollection
Dehumidifier	oic.d.dehumidifier	Binary Switch	oic.r.switch.binary
		Humidity	oic.r.humidity
Dishwasher	oic.d.dishwasher	Binary Switch	oic.r.switch.binary
		Mode	oic.r.mode
Door	oic.d.door	Open Level	oic.r.openlevel
Dryer (Laundry)	oic.d.dryer	Binary switch	oic.r.switch.binary
		Operational State	oic.r.operational.state
Electric Vehicle Charger	oic.d.electricvehiclecharger	Binary Switch	oic.r.switch.binary
		Operational State	oic.r.operational.state
		Battery	oic.r.battery
		Vehicle Connector	oic.r.vehicleconnector
Electric Meter	oic.d.electricmeter	Energy Consumption	oic.r.energy.consumption
Energy Generator	oic.d.energygenerator	Energy Generation	oic.r.energy.generation
Energy Monitor	oic.d.energymonitor	One of: Energy Consumption, Gas Consumption	oic.r.energy.consumption or oic.r.gas.consumption
Fan	oic.d.fan	Binary Switch	oic.r.switch.binary
Food Probe	oic.d.foodprobe	Temperature (Sensor)	oic.r.temperature
Freezer	oic.d.freezer	Temperature(2)(1 Sensor and 1 Actuator)	oic.r.temperature
Garage Door	oic.d.garagedoor	Door	oic.r.door
Generic Sensor	oic.d.sensor	Any Resource Type that supports and exposes in "/oic/res" the oic.if.s interface.	oic.r. <x> Where this equates to any Resource Type that supports the oic.if.s Interface.
Grinder	oic.d.grinder	Operational State	oic.r.operational.state
		Grinder Settings	oic.r.grinder
Ground Fault Circuit Interrupter	oic.d.gfci	Fault Interrupter Switch	oic.r.switch.fault
Humidifier	oic.d.humidifier	Binary Switch	oic.r.switch.binary
Kettle	oic.d.kettle	Binary Switch	oic.r.switch.binary
Light	oic.d.light	Binary Switch	oic.r.switch.binary
Light (DALI) Application Controller	oic.d.dali.ac	Dali	oic.r.dali
Light (DALI) Bus	oic.d.dali.bus	Dali	oic.r.dali

Copyright Open Connectivity Foundation, Inc. © 2016-2023. All rights Reserved

		Dali Config	oic.r.dali.config
Light (DALI) Device	oic.d.dali	Dali	oic.r.dali
		Dali Config	oic.r.dali.config
Indoor Garden	oic.d.indoorgarden	Binary Switch	oic.r.switch.binary
Mattress	oic.d.mattress	Binary Switch	oic.r.switch.binary
		Mode	oic.r.mode
Oven	oic.d.oven	Binary Switch	oic.r.switch.binary
		Temperature (2) (1 Sensor and 1 Actuator)	oic.r.temperature
Printer	oic.d.printer	Binary Switch	oic.r.switch.binary
		Operational State	oic.r.operational.state
Printer Multi-Function	oic.d.multifunctionprinter	Binary switch	oic.r.switch.binary
		Operational State (2)[a]	oic.r.operational.state
		Automatic Document Feeder	oic.r.automaticdocumentfeeder[b]
Receiver	oic.d.receiver	Binary Switch	oic.r.switch.binary
		Audio Controls	oic.r.audio
		Media Source List (2)	oic.r.media.input, oic.r.media.output
Refrigerator	oic.d.refrigerator	Temperature (2) (1 Sensor and 1 Actuator)	oic.r.temperature
Robot Cleaner	oic.d.robotcleaner	Binary Switch	oic.r.switch.binary
		Mode	oic.r.mode
Scanner	oic.d.scanner	Binary Switch	oic.r.switch.binary
		Operational State	oic.r.operational.state
		Automatic Document Feeder	oic.r.automaticdocumentfeeder
Security Panel	oic.d.securitypanel	Mode	oic.r.mode
Set Top Box	oic.d.stb	Binary Switch	oic.r.switch.binary
Smart Light	oic.d.light.smart,oic.d.light	Binary Switch	oic.r.switch.binary
		Dimming	oic.r.light.dimming
Smart Lock	oic.d.smartlock	Lock Status	oic.r.lock.status
Smart Plug	oic.d.smartplug	Binary Switch	oic.r.switch.binary
Steam Closet	oic.d.steamcloset	Operational State	oic.r. operational.state
		Time Period	oic.r.time.period
Switch	oic.d.switch	Binary Switch	oic.r.switch.binary
Television	oic.d.tv	Binary Switch	oic.r.switch.binary
		Audio Controls	oic.r.audio
		Media Source List	oic.r.media.input
Thermostat	oic.d.thermostat	Temperature (2) (1 Sensor and 1 Actuator)	oic.r.temperature

Copyright Open Connectivity Foundation, Inc. © 2016-2023. All rights Reserved

Wallpad	oic.d.wallpad	Binary Switch	oic.r.switch.binary
		Temperature(2) (1 Sensor and 1 Actuator)	oic.r.temperature
Washer (Laundry)	oic.d.washer	Binary Switch	oic.r.switch.binary
		Operational State	oic.r.operational.state
Water Heater	oic.d.waterheater	Binary Switch	oic.r.switch.binary
		Temperature(2) (1 Sensor and 1 Actuator)	oic.r.temperature
Water Purifier	oic.d.waterpurifier	Operational State	oic.r.operational.state
		Water Info	oic.r.waterinfo
Water Valve	oic.d.watervalve	Open Level	oic.r.openlevel
Window	oic.d.window	Open Level	oic.r.openlevel

[a] A Multi-Function Printer shall expose two instances of an Operational State Resource; each in discrete Collections, one for the Printer specific operational state information and one for the Scanner specific operational state information. The friendly name for the Collections should indicate the device modality (printer or scanner).

[b] A Multi-Function Printer shall only expose an Automatic Document Feeder Resource if the device has the Automatic Document Feeder capability.

B.2 Standardized enumeration values

B.2.1 Introduction

Resource Types may have a list of supported enumeration values. The supported enumeration values may differ when applied in different devices. In this clause the affected Resource Types are described by:

– list of supported values

– list of recommended values when applied to a specific Device Type

B.2.2 Alphabetical list of standardized enumeration types

Table B.2 lists the standardized enumeration types that may be present within Resource Properties where the Property is defined as containing values from this clause. The enumerations also apply to Semantic Tags (see ISO/IEC 30118-1) where the tag is defined as containing values from this clause.

Table B.2 – The defined set of standardized enumerations

Enumeration	Description
aborted	An internal device, communication or security error
active	Unit is active
after	unit is in a mode that is waiting for another trigger (after which)
airClean	unit is in air clean mode or state
airDry	unit is air drying
airfilterconsumable	identifies the main air filter consumable ("oic.r.consumable") Resource of the Device
airflow	Identifies the main airflow ("oic.r.airflow") Resource of the Device
airpurifierswitch	identifies that the switch ("oic.r.switch.binary") can turn on/off the air purifying function of the Device

Copyright Open Connectivity Foundation, Inc. © 2016-2023. All rights Reserved

airqualityairpollution	identifies the air quality ("oic.r.airquality") Resource measuring (total) AirPollution
airqualitych20	identifies the air quality ("oic.r.airquality") Resource measuring measuring Methanol (also known as Formaldehyde): (CH2O)
airqualityco	identifies the air quality ("oic.r.airquality") Resource measuring carbon monoxide (CO)
airqualityco2	identifies the air quality ("oic.r.airquality") Resource measuring carbon dioxide (CO2)
airqualityno2	identifies the air quality ("oic.r.airquality") Resource measuring nitrogen dioxide (NO2)
airqualityo3	identifies the air quality ("oic.r.airquality") Resource measuring ozone (O3)
airqualityodor	identifies the air quality ("oic.r.airquality") Resource measuring Odor
airqualityso2	identifies the air quality ("oic.r.airquality") Resource measuring sulphur dioxide (SO2)
airqualitypm1	identifies the air quality ("oic.r.airquality") Resource measuring particulate matter (pm1)
airqualitypm10	identifies the air quality ("oic.r.airquality") Resource measuring particulate matter (pm10)
airqualitypm2.5	identifies the air quality ("oic.r.airquality") Resource measuring particulate matter (pm2.5)
airqualitysmoke	identifies the air quality ("oic.r.airquality") Resource measuring smoke
airqualityvoc	identifies the air quality ("oic.r.airquality") Resource measuring volatile organic compounds (VOC)
alarm	unit is in an alarm mode or state
alarmtimeperiod	identifies the duration time for an alarm ("oic.r.time.period")
ambient	unit is in ambient mode or state
armedAway	unit is armed for away
armedInstant	unit is armed instantly
armedMaximum	unit is armed at maximum level
armedNightStay	unit is armed in night stay
armedStay	unit is armed in stay mode
aroma	unit is armed in aroma mode
artificialintelligence	unit is in artificial intelligence mode
auto	unit is in auto mode or state
awning	identifies that the instance of "oic.r.windowcovering" represents an awning
babyCare	unit is in baby care mode or state
baking	unit is in baking mode or state
battery	identifies the main battery ("oic.r.battery") Resource of the Device
boiling	unit is in boiling state or mode
brewing	unit is in brewing state or mode
cancelled	the job was cancelled either by the remote client or by the user

Copyright Open Connectivity Foundation, Inc. © 2016-2023. All rights Reserved

changeCondition	the unit has experienced a change in condition, mode or state
charging	the unit is in charging mode or state
checkingTurbidity	unit is in checking turbidity state
circulating	unit is in circulating model or state
cleaning	unit is in cleaning mode or state
clearVoice	type is in sound mode
clothes	unit is in clothes mode
completed	job finished successfully
contactsensor	identifies an "Intruder Alert Zone" ("oic.r.iaszoneinfo") type of contact sensor
convenientroomdoor	identifies the convenient room door ("oic.r.door") of the refrigerator ("oic.d.refrigerator")
convertible	unit is for a convertible part (among compartments of a refrigerator). User can configure the parts as desired
convBake	unit is in convection bake mode
convRoast	unit is in convection roast mode
cool	unit is in cooling mode or state
coolClean	unit is in cool-clean mode or state
coolingtargettemperature	identifies the target cooling temperature ("oic.r.temperature") Resource of the air conditioner ("oic.d.airconditioner")
coolerdoor	identifies the cooler door ("oic.r.door") of the Device
coolermeasuredtemperature	identifies the measured cooler temperature ("oic.r.temperature") Resource of the Device
coolertargettemperature	identifies the target cooler temperature ("oic.r.temperature") Resource of the Device
cosensor	identifies an "Intruder Alert Zone" ("oic.r.iaszoneinfo") type of carbon monoxide sensor
currenttemperature	identifies the current measured temperature ("oic.r.temperature") Resource of the Device
custom	type is in sound mode
delicate	unit is in delicate mode or state
deodorization	identifies the main deodorization ("oic.r.deodorization") Resource of the Device
diagnosis	unit is in diagnosis mode or state; when an error occurs, a Device is in diagnosis mode (state) for identifying causes and finding solutions
disabled	unit's current operational mode is disabled
dishwasherdoor	identifies the main door ("oic.r.door") Resource of the Dish Washer ("oic.d.dishwasher")
down	unit is unavailable
downWard	identifies that the instance of "oic.r.movement.linear" represents downward
drapery	identifies that the instance of "oic.r.windowcovering" represents drapery
dry	unit is dry mode
dryClean	unit is in dry-clean mode or state

Copyright Open Connectivity Foundation, Inc. © 2016-2023. All rights Reserved

dual	unit is in dual mode
dynamic	type is in picture mode
ecomode	identifies the main (overall) ecomode ("oic.r.ecomode") Resource of the Device
edge	unit is edge mode or state
enabled	unit's current operational mode is enabled
express	unit is in express mode or state
extended	unit is in extended mode or state
fan	unit is in fan mode or state
fast	unit is in fast mode or state
filterMaterial	filter material that is used by a Device
firesensor	identifies an "Intruder Alert Zone" ("oic.r.iaszoneinfo") type of fire sensor
focused	unit is in focused mode or state
foot	unit is in foot mode or state, typically seen as a mode on a Smart Mattress
freezePrevent	unit is in freeze prevent mode or state
freezePreventPending	unit is pending freeze prevent mode
freezePreventPause	unit is in the paused state while in freeze prevent mode
freezer	unit is for a freezer part (among compartments of a refrigerator
freezerdoor	identifies the freezer room door ("oic.r.door") Resource of the Device
freezermeasuredtemperature	identifies the measured freezer temperature ("oic.r.temperature") of the Device
freezertargettemperature	identifies the target freezer temperature ("oic.r.temperature") of the Device
fridge	unit is for a fridge part (among compartments of a refrigerator
glassbreaksensor	identifies an "Intruder Alert Zone" ("oic.r.iaszoneinfo") type of glass break sensor
grinding	unit is in grinding state or mode
healing	unit is in healing mdoe or state
heating	unit is in heating mode or state
heatingtargettemperature	identifies the target heating temperature ("oic.r.temperature") of the Device
heavy	unit is in heavy mode or state
homing	unit is in homing state, Device produces a special signal so that it can be found using electronic equipment
hot	unit is in hot mode or state
humidify	unit is in humidify mode or state
humidity	identifies the main humidity ("oic.r.humidity") Resource of the Device
ice	unit is in ice mode or state
idle	new jobs can start processing without waiting
initializing	unit is in initializing state, a Device resets its values set by a Client to initial values set by manufacturer

Copyright Open Connectivity Foundation, Inc. © 2016-2023. All rights Reserved

ink	generic ink cartridge for a Device
inkBlack	black ink cartridge for a Device
inkCyan	cyan ink cartridge for a Device
inkMagenta	magenta ink cartridge for a Device
inkTricolour	tricolour ink cartridge for a Device
inkYellow	yellow ink cartridge for a Device
invalid	unit is in an invalid mode, state, or setting
keepwarm	unit is in keep warm state or mode
keyfob	identifies an "Intruder Alert Zone" ("oic.r.iaszoneinfo") type of key fob
keypad	identifies an "Intruder Alert Zone" ("oic.r.iaszoneinfo") type of keypad
localtime	identifies the clock ("oic.r.clock") time representing the local time zone
macro	unit is in macro mode or state, Client manually inputs a rule or pattern of operation
main	unit is part of the main device or is the main device
manual	unit is in manual mode or state
map	unit is in mapping mode or state
mineral	unit is in mineral mode
monitoring	unit is in monitoring mode or state; such as security functions detecting unusual movements in an empty place for a camera-mounted Device
monitoringInitializing	unit is in initializing state in monitoring mode; a Device resets its values of monitoring mode to initial values set by manufacturer
monitoringMoving	unit is in moving state in monitoring mode; following a specific target that client select while the Device is in monitoring mode
monitoringPreparation	unit is in preparation state in monitoring mode; a Device is getting ready for its monitoring operation
morning	unit is in morning mode or state
motionsensor	identifies an "Intruder Alert Zone" ("oic.r.iaszoneinfo") type of motion sensor
movie	type is in picture mode
moving	unit is in moving state; the action of going to a different place
music	type is in sound mode
natural	type is in picture mode
night	unit is in night-time mode or state
nightDry	unit is in night-time drying mode or state
none	unit is in an undefined mode or state
normal	unit is in a normal operational state
notsupported	ability to set a specific operational mode by a Client is not supported
onedoorfridgedoor	identifies the single door ("oic.r.door") of the Device
operationalstate	identifies the main (overall) operational state ("oic.r.operational.state") of the Device

Copyright Open Connectivity Foundation, Inc. © 2016-2023. All rights Reserved

operationalmode	identifies the main (overall) mode ("oic.r.mode") of the Device
part	unit is in part mode or state, typically seen on a robot cleaner, analogous to spot cleaning
pause	unit is paused (by user)
ped	identifies an "Intruder Alert Zone" ("oic.r.iaszoneinfo") type of personal emergency device
pending	job initiated, engine is preparing
pendingHeld	job is not a candidate for processing for any number of reasons, will return to pending state if reasons are solved
permapress	unit is in permanent press mode or state
point	unit is at a defined or specific point (with respect to movement)
powerOff	unit is powered off (standby)
powerswitch	identifies the Resource that is the main power switch ("oic.r.switch.binary"), e.g. on/off of the Device
preHeat	unit is in pre-heat mode or state
preparation	unit is in preparation mode or state; a Device is getting ready for its operation
preSteam	unit is in pre-steam mode or state
preWash	unit is pre wash mode
processing	processing the job
projectorscreen	identifies that the instance of "oic.r.windowcovering" represents a projector screen
pure	unit is in pure mode or state
quick	unit is in quick mode or state
quiet	unit is in quiet mode
refresh	unit is in refresh mode or state
refrigeration	identifies the main ("oic.r.refrigeration") Resource of the Device
relativeremainingtimeperiod	identifies the Resource as (overall) relative remaining time period ("oic.r.time.period")
relax	unit is in relax mode or state
remainingtimeperiod	identifies the Resource as (overall) absolute remaining time period ("oic.r.time.period")
remotecontrol	identifies an "Intruder Alert Zone" ("oic.r.iaszoneinfo") type of remote control
remotecontrolenable	identifies the Resource for remote control enable ("oic.r.switch.binary"), e.g. remote enablement of the Device
repeat	unit is in repeat mode or state
reserve	unit is in reserve mode or state
reserving	unit is in reserving state
restart	unit is in re-start mode or state
ringing	unit is in ringing state to indicate alarm, emergency, caution, and so on
rinse	unit is in rinse mode or state

Copyright Open Connectivity Foundation, Inc. © 2016-2023. All rights Reserved

rollershade	identifies that the instance of "oic.r.windowcovering" represents a roller shade
rollershade2	identifies that the instance of "oic.r.windowcovering" represents a two motor roller shade
rollershadeext	identifies that the instance of "oic.r.windowcovering" represents an exterior roller shade
rollershadeext2	identifies that the instance of "oic.r.windowcovering" represents an exterior two moto roller shade
sectored	unit is in sectored mode or state
select	unit is in select mode or state
securityrepeater	identifies an "Intruder Alert Zone" ("oic.r.iaszoneinfo") type of security repeater
setOption	unit is in a state whereby device options may be set
shake	unit is in shake mode or state
shoesDry	unit is in shoes dry mode or state
shutter	identifies that the instance of "oic.r.windowcovering" represents a shutter
silent	unit is in silent mode or state
sleep	unit is in sleep mode or state
sleepreservationtimeperiod	identifies the Resource ("oic.r.time.period") as sleep reservation time
smart	unit is in smart mode or state
soaking	unit is in soaking mode or state
soda	unit is in soda mode
spin	unit is in spin mode or state
spot	unit is in spot mode or state
spray	unit is in spray mode or state
standard	type is in picture or sound mode
standardcie	identifies an "Intruder Alert Zone" ("oic.r.iaszoneinfo") type of standard control and indicator equipment
start	unit is in start mode or state
startreservationtimeperiod	identifies the Resource ("oic.r.time.period") as start of reservation time
steam	unit is in steam mode or state
steamSoftening	unit is in steam softening mode or state, whereby the fabric is softened using only water and no softening additives
sterilize	unit is in sterilize mode or state
stop	identifies that the instance of "oic.r.movement.linear" represents stop
stopreservationtimeperiod	identifies the Resource ("oic.r.time.period") as stop of reservation time
stopped	error condition occurred
stretching	unit is in stretching mode or state
subDevice	unit is for a sub-device that makes up part of a main device
swd	identifies an "Intruder Alert Zone" ("oic.r.iaszoneinfo") type of standard warning device

Copyright Open Connectivity Foundation, Inc. © 2016-2023. All rights Reserved

targettemperature	identifies the target (setpoint) temperature ("oic.r.temperature") of the Device
testing	calibrating, preparing the unit
tiltblind	identifies that the instance of "oic.r.windowcovering" represents a tilt only tilt blind
tiltblind2mode	identifies that the instance of "oic.r.windowcovering" represents a tilt and lift tilt blind
toner	generic toner cartridge for a Device
tonerBlack	black toner cartridge for a Device
tonerCyan	cyan toner cartridge for a Device
tonerMagenta	magenta toner cartridge for a Device
tonerYellow	yellow toner cartridge for a Device
turbo	unit is in turbo mode or state
update	unit is in update mode or state
upWard	identifies that the instance of "oic.r.movement.linear" represents upward
vendorspecific	identifies an "Intruder Alert Zone" ("oic.r.iaszoneinfo") type that is specific to the manufacturer
vibrationsensor	identifies an "Intruder Alert Zone" ("oic.r.iaszoneinfo") type of vibration sensor
waiting	unit is in waiting mode or state
wakeup	unit is in wakeup state just after sleep mode
warm	unit is in warm mode or state
wash	unit is in wash mode or state
waterinfo	identifies the main water information ("oic.r.waterinfo") of the Device
waterfilterconsumable	identifies the main water filter consumable ("oic.r.consumable") of the Device
waterproofing	unit is in waterproofing mode or state
watersensor	identifies an "Intruder Alert Zone" ("oic.r.iaszoneinfo") type of water sensor
wet	unit is in wet mode or state
wind	unit is in wind mode
wrinklePrevent	unit is in winkle prevent mode
zigzag	unit is in zigzag mode or state

B.2.3 Standardized list of supported values for mode Resource Type (oic.r.mode)

Table B.3 lists per Device Type the enumeration values that should be exposed by the “supportedModes” Property and by extension allowed within the “modes” Property of the "oic.r.mode" Resource Type. A Device shall not expose any value not defined in Table B.3 unless that value follows the requirements in clause 6.4.

Copyright Open Connectivity Foundation, Inc. © 2016-2023. All rights Reserved

Table B.3 – List of supported "oic.r.mode" values per Device Type ("rt")

Device Name (informative)	Device Type (rt) (Normative)	Supported enumeration value	Description
Air Conditioner	oic.r.airconditioner	airClean	This removes contaminants from the indoor air.
		airDry	This removes moisture from the inside of the device to prevent mould after cooling air.
		aroma	This adds a deodorizing scent to make the air fresher.
		auto	This automatically selects and operates cooling and/or heating based on the current temperature condition.
		cool	This cools the indoor air.
		coolClean	This removes contaminants while also cooling
		dry	This reduces indoor humidity
		dryClean	This removes contaminants while also reducing humidity
		energySaving	This saves energy (electricity) by restricting some functions.
		fan	This circulates the inside air without cool and inflow of outside air.
		wind	This circulates the air with a stronger current or flow
Air Purifier	oic.d.airpurifier	auto	This is continuously checking the air quality and operating as needed to maintain good air quality.
		babyCare	This removes contaminants from indoor air and discharges clean air in a downward flow for babies and children.
		circulating	This circulates the inside air by using the fan inside the device.
		cleaning	This removes contaminants from the indoor air. In the case where the device consists of lower and upper sections, this function is operated only in the lower section.
		dual	This removes contaminants from the indoor air. In the case where the device consists of lower and upper sections, this function operates in both of sections.
		humidity	This increases moisture in the indoor air.
		silent	This reduces noise during the operation.
		sleep	This is a low power mode for the device to lower electrical consumption on standby.
Airer	oic.d.airer	airDry	This dries wet materials by using forced air (no heat).
		Dry	This dries wet materials by using hot air.
		none	This is an undefined mode.
Dishwasher	oic.d.dishwasher	auto	This senses the soiled amount and soiled toughness and is optimized to achieve the best cleaning.
		cleaning	This means cleaning the inside of the device when there are no dishes.

Copyright Open Connectivity Foundation, Inc. © 2016-2023. All rights Reserved

		delicate	This is to clean delicate items (e.g., fine china, small plates, long cutlery, cups, glasses, and so on).
		energySaving	This saves energy by reducing the wash and rinsing temperature.
		express	This cleans lightly soiled dishes faster than “quick” mode.
		fast	This focuses on cleaning soiled dishes quickly.
		heavy	This cleans heavily soiled dishes with the strongest spray intensity.
		normal	This cleans soiled dishes for everyday use based on basic setting from manufacturers.
		quick	This quickly cleans the lightly soiled dishes used that were used recently.
		refresh	This is to freshen up and warm dishes that have been unused for a long time.
		rinse	This rinses dishes with water.
		spray	This provides selectable options for spray intensity. (For example, the options could be soft, medium, and strong)
		steam	This adds steam at the beginning of the cycle to improve the wash performance.
		turbo	This cleans heavily soiled dishes by using slightly more energy and water.
		update	This downloads a dedicated cycle via Wi-Fi, NFC, and so on.
Oven	oic.d.oven	baking	This cooks by dry heat in an oven
		convBake	This is a baking mode of a convection oven
		convRoast	This is a roasting mode of a convection oven
Robot Cleaner	oic.d.robotcleaner	after	unit is in a mode that is waiting for another trigger (after which)
		alarm	The unit is in an alarm mode
		auto	This is in automatic cleaning mode
		charging	This is when the Device is charging at the home station
		cleaning	This is standard cleaning mode
		edge	This is cleaning the outside perimeter of the area.
		homing	The Device is returning to its charging station, or producing a special signal so it can be found
		idle	This is when the unit is idle
		macro	This is cleaning specific areas manually selected by a client.
		manual	The unit is under direct manual control
		map	The unit is performing its mapping function (creating a 2D map of the space)
		part	This is handling a portion of the cleaning cycle
		point	The unit is at a defined or specific point (with respect to movement)
		powerOff	The unit is in a power off or standby mode

Copyright Open Connectivity Foundation, Inc. © 2016-2023. All rights Reserved

		repeat	This is repeating the previous set cycle
		reserve	The unit is in a reserve mode that can be user defined
		sectored	This is cleaning complex areas by dividing the cleaning area into sections.
		select	This is cleaning areas selected by a client among divided sections of the indoor.
		spot	This is cleaning a small area within the radius of the manufacturer's default set.
		stop	The Device has encountered an error or is otherwise stationary
		zigzag	This is cleaning each spot of indoor by moving zigzag.
Security Panel	oic.d.securityPanel	active	
		armedAway	
		armedInstant	
		armedMaximum	
		armedNightStay	
		armedStay	

The modes can be viewed upon as mode changes of the device. However, this document does not impose any relationship between the different modes of a Device. Hence all mode changes are expected to occur from a Client point of view.

Figure B.1 provides an illustrative example of a possible set of modes and the transitions between them for a Dryer Device Type (oic.d.dryer).

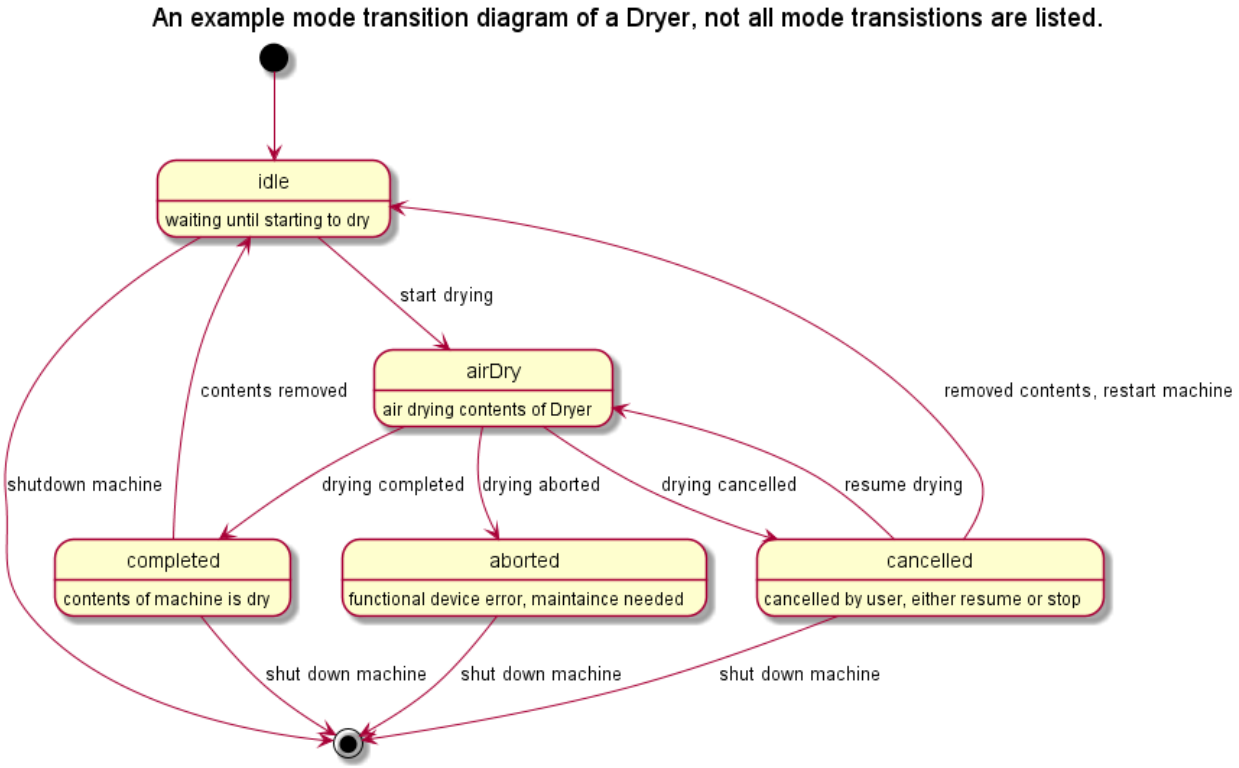

Figure B.1 – Example of mode transitions of a dryer

B.2.4 Standardized list of supported values for operational state Resource Type (oic.r.operational.state)

Table B.4 lists the supported enumeration values per Device Type for the Property “machineStates” of the operational state Resource Type.

Table B.4 – List of supported "oic.r.operational.state" values per Device Type ("rt")

Device Name (informative)	Device Type (rt) (Normative)	Supported enumeration value machineStates
Dishwasher	oic.d.dishwasher	start
		stop
Dryer	oic.d.dryer	start
		stop
Oven	oic.d.oven	completed
		preHeat
		start
Printer	oic.d.printer	idle
		processing
		stopped
Printer Multi-Function	oic.d.multifunctionPrinter	See Printer
		See Scanner
Robot Cleaner	oic.d.robotcleaner	homing
		pause
		restart
		start
		wakeUp
Scanner	oic.d.scanner	down
		idle
		processing
		stopped
		testing
Steam Closet	oic.d.steamcloset	start
		stop
		wakeUp
Washer	oic.d.washer	start
		stop
		wakeUp

Copyright Open Connectivity Foundation, Inc. © 2016-2023. All rights Reserved

Table B.5 lists the supported enumeration values per Device Type for the Property "jobStates" of the operational state Resource Type.

Table B.5 – List of supported values per Device Type ("rt") for jobStates of operational state Resource Type

Device Name (informative)	Device Type (rt) (Normative)	Supported enumeration value jobStates	Description
Dishwasher	oic.d.dishwasher	aborted	This is an internal device, communication, or security error. (e.g. power_fail)
		airDry	This dries wet materials by using forced air (no heat).
		cancelled	This state is cancelled by (remote) user.
		completed	This state is a job completed without any error.
		down	This state is unavailable to operate a job due to some issues. (e.g. power_off)
		nightDry	This runs the ventilation fan periodically to vent the stream from the tub. Because the dishes are often left in the dishwasher overnight after the cycle ends, this can result in the steam inside the tub condensing on the dishes, leaving them wet. To prevent the above state, the device can provide this state.
		pause	This state is paused by user.
		pending	This state is waiting that the device prepares to initiate a job.
		reserve	This state means that a client has finished setting the system for future use.
		rinse	This is to rinse the dishes with water
		wash	This is to clean the soiled dishes
Dryer	oic.d.dryer	aborted	This is an internal device, communication, or security error.
		airDry	This dries the materials by using forced air (no heat).
		completed	This state is a job completed without any error.
		coolDown	This state is for the temperature cool down to reduce clothes temperature' by spinning the interior drum without heat.
		diagnosis	When an error occurs, the device enters this state to identify causes and find solutions.
		down	This state is device unavailable to operate a job due issues. (e.g. power_off)
		pause	This state is paused by user.
		pending	This state is waiting that the device prepares to initiate a job.
		processing	This is working on a job executed by a client.
		reserve	This state means that a client has finished setting the system for future use.
		wrinklePrevent	This state runs the dryer periodically to help prevent wrinkles from forming.

Copyright Open Connectivity Foundation, Inc. © 2016-2023. All rights Reserved

Oven	oic.d.oven	cleaning	This is cleaning to remove the soiled inside and outside of the device.
		completed	This state is job completed without any error.
		cool	This is cooling the temperature inside and outside of the device after finishing cooking.
		down	This state is unavailable to operate a job due to issues. (e.g. power_off)
		idle	This means that new jobs can start processing without waiting. (e.g., preheating is done)
		pause	This state is paused by user.
		pending	This state is waiting that the engine prepares to initiate a job.
		preHeat	This is pre-heating the inside of the device prior to cooking.
		processing	This is working on a job executed by a user.
		setOption	This is in status while being set for the device's options.
Printer	oic.d.printer	aborted	This is in internal device, communication, or security error.
		cancelled	This state is cancelled by (remote) user.
		completed	This state is job completed without any error.
		pending	This state is waiting that the device prepares to initiate a job.
		pendingHeld	This state halts pending from processing for any number of reasons. This will return to pending state if the issues are resolved.
		processing	This is working on a job executed by a client.
Printer Multi-Function	oic.d.multifunction Printer	See printer	Refer to the supported enumeration values of a Printer (oic.d.printer).
		See scanner	Refer to the supported enumeration values of a Scanner (oic.d.scanner).
Robot Cleaner	oic.d.robotcleaner	charging	This means that the device is charging. In the case of robot cleaner, it can be charged by connecting with its home station.
		cleaning	This is cleaning indoor floor with selected mode by a client.
		diagnosis	When an error occurs, a device enters this state to identify causes and find solutions.
		homing	This state means that the device is moving to its home station after finishing work or to charging its battery
		idle	This means that new jobs can start processing without waiting.
		initializing	This is resetting device to initial values set by manufacturer.
		macro	This is controlled and cleaned by the client based on a remote controller.
		mapping	At first use of the device, it scans the indoor area by moving to make a map.

Copyright Open Connectivity Foundation, Inc. © 2016-2023. All rights Reserved

		monitoring	This is a security functions detecting strange movements in an empty place by using mounted cameras.
		monitoringInitializing	This is resetting device to initial values set by the manufacturer.
		monitoringMoving	This is moving to follow a specific target that a user selects while the device is in monitoring mode.
		monitoringPreparation	This is in a state where a device is getting ready for its monitoring operation.
		moving	This is moving to go to a different place.
		pause	This state is paused by user.
		preparation	This means that the device is getting ready for its operation.
		reserving	This state means that a client is setting systems for future use.
		setOption	This is the status while being set for the device's options.
Scanner	oic.d.scanner	aborted	This is in internal device, communication, or security error.
		cancelled	This state is cancelled by (remote) user.
		completed	This state is completely finished the job without any error.
		pending	This state is waiting that the device prepares to initiate a job.
		processing	This is working on a job executed by a client.
Steam Closet	oic.d.steamcloset	aborted	This is an internal device, communication, or security error.
		airDry	This is in drying the materials by using wind.
		completed	This state is job completed without any error.
		diagnosis	When an error occurs, a device enters this state to identify causes and find solutions.
		down	This state is unavailable to operate a job due to issues (e.g. power_off)
		idle	This means that new jobs can start processing without waiting (e.g. washing is done).
		initializing	This is resetting device to initial values set by manufacturer.
		nightDry	This is a special sanitary care during the night, which runs heavy sanitary care and then dries periodically every hour for an additional eight hours.
		pause	This state is paused by user.
		pending	This state is waiting that the device prepares to initiate a job.
		preHeat	This is preheating the inside of the device.
		preSteam	This is steaming the inside of the device to remove residual material at the beginning of the cleaning sequence.
		processing	This is working on a job executed by a client.

Copyright Open Connectivity Foundation, Inc. © 2016-2023. All rights Reserved

		reserve	This state means that a client has finished setting the system for future use.
		shake	This is to quickly shake the hanger inside of the device to remove drops of water on clothes after a steam cycle.
		sleep	This is in low power state for the device to lower electrical consumption on standby.
		steam	This sprays steam on the washable items to remove odors and wrinkles after preheat the inside of the device.
		sterilize	This removes germs on items through high temperature and steam.
		update	This downloads a dedicated cycle via Wi-Fi, NFC, and so on.
Washer	oic.d.washer	aborted	This is an internal device, communication, or security error.
		changeCondition	After the washer checked the turbidity, the device could change condition progressing state. For example, the washer can rinse the clothes one more time or finish washing it.
		checkingTurbidity	The device automatically checks turbidity during rinsing the clothes to check if the detergent remains.
		completed	This state is completely finished the job without any error.
		coolDown	This state is temperature cool down to reduce clothes temperature' by spinning the interior drum without heat only in case the washer supports a dry function.
		diagnosis	When an error occurs, a device enters this state to identify causes and find solutions.
		down	This state is unavailable to operate a job due to issues. (e.g. power_off)
		dry	This is to dry the washed clothes with heat.
		freezePrevent	To prevent developing ice inside of the device and pipe, the device takes special care of the device condition in the winter.
		freezePreventPause	This is paused state in freeze prevent mode.
		freezePreventPending	This is pending state in freeze prevent mode.
		grinding	This is to grind debris to prevent drain pipes being clogged.
		idle	This means that new jobs can start processing without waiting. (e.g. rinsing clothes is done)
		pause	This state is paused by user.
		pending	This state is waiting that the device prepares to initiate a job.
		preparation	This means that the device is getting ready for its operation This state includes checking the amount of detergent, softener, water and so on.
		preWash	This is to wash heavily soiled clothes in advance before starting the washing process.

Copyright Open Connectivity Foundation, Inc. © 2016-2023. All rights Reserved

		processing	This is working on a job executed by a client.
		refresh	This removes wrinkles from slightly wrinkled clothes by using steam for if the washer supports steam function
		reserve	This state means that a client has finished setting the system for future use.
		rinse	This is to rinse the dishes with water.
		shoesDry	This is a special cycle for drying shoes.
		sleep	This is in low power state for the device to lower electrical consumption on standby.
		soaking	This makes clothes thoroughly wet by immersing them in liquid so dust and stains can easily be removed.
		spin	This is spinning fast to remove the water after completely rinsing the clothes.
		steam	This sprays steam on clothes to remove odors and wrinkles.
		steamSoftening	This softens the fabric using 100% pure water and no chemicals with steam instead of chemical fabric softeners.
		testing	This checks the amount of clothes inside the washer and displays the results.
		update	This downloads a dedicated cycle via Wi-Fi, NFC, and so on.
		wash	This is washing the clothes with selected cycle set by a client
		waterproofing	This washes (sports) clothes with a dedicated liquid for waterproofing.
		wrinklePrevent	This state can help prevent wrinkles from forming.

The operational state can be viewed as state changes of the device that includes separate handling of jobs within the overall machine state. However, this document does not impose any relationship between the different machine or job states of a device. Hence all "machinestate" and or "jobStates" changes are expected to occur from a Client point of view.

Figure B.2 provides an illustrative example of a possible set of job states and the transitions between them for a Printer Device Type ("oic.d.printer").

Copyright Open Connectivity Foundation, Inc. © 2016-2023. All rights Reserved

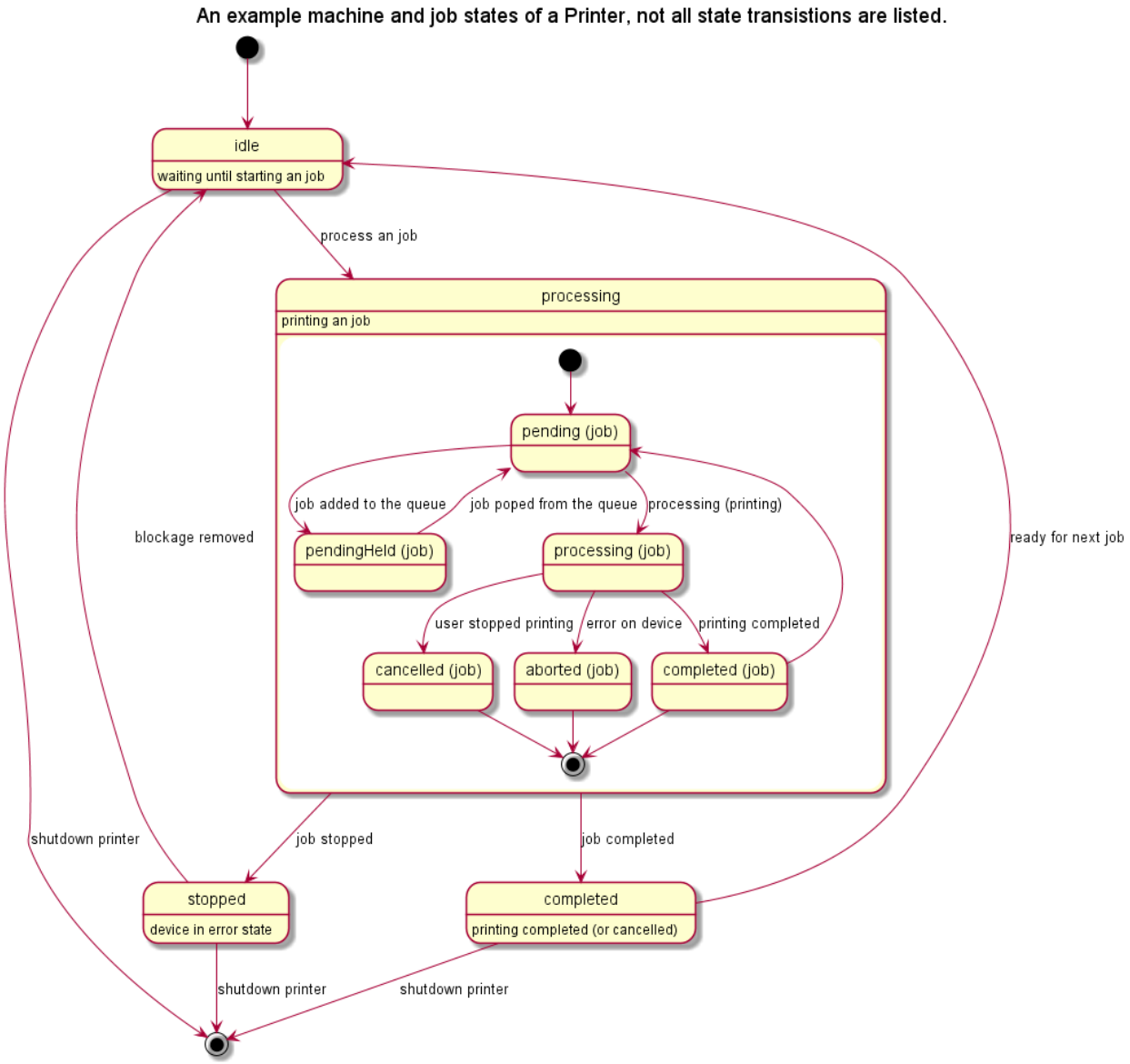

Figure B.2 – Example of job state transitions of a printer

B.2.5 Standardized list of supported values for consumable and consumable collection Resource Types (oic.r.consumable, oic.r.consumablecollection)

Table B.6 lists the enumeration values that may be populated in both the supportedconsumables (in oic.r.consumablecollection) and typeofconsumable (in oic.r.consumable) Properties within the Consumable and Consumable Collection Resource Types. The typeofconsumable Property shall only be populated with a value exposed within the supportedconsumables Property in a specific instance of the Consumable Collection Resource Type.

This constitutes the known set of possible values for these Properties in the Consumable and Consumable Collection Resources. A vendor may extend this set by providing vendor defined enumerations following the convention defined in ISO/IEC 30118-4.

Copyright Open Connectivity Foundation, Inc. © 2016-2023. All rights Reserved

Table B.6 – List of defined enumeration values for oic.r.consumable, oic.r.consumablecollection

Friendly Name (informative)	Enumeration Value (Normative)	Description (Informative)
Toner Cartridge	toner	Generic toner cartridge.
Black Toner Cartridge	tonerBlack	Black toner cartridge
Cyan Toner Cartridge	tonerCyan	Cyan toner cartridge
Magenta Toner Cartridge	tonerMagenta	Magenta toner cartridge
Yellow Toner Cartridge	tonerYellow	Yellow toner cartridge
Filter Material	filterMaterial	Any replaceable or reusable filter material; such as water filters, air filters, dust filters etc.
Ink Cartridge	ink	Generic ink cartridge
Black Ink Cartridge	inkBlack	Black ink cartridge
Cyan Ink Cartridge	inkCyan	Cyan ink cartridge
Magenta Ink Cartridge	inkMagenta	Magenta ink cartridge
Yellow Ink Cartridge	inkYellow	Yellow ink cartridge
Tricolour Ink Cartridge	inkTricolour	Tri-colour ink cartridge; typically Cyan plus Magenta plus Yellow.

B.3 Camera media format (oic.r.media)

The supported camera media formats can be discovered by looking at the SDP (see IETF RFC 4566) list of the media Resource Type. The recommended list of supported media formats are listed in Table B.7.

Table B.7 – Recommended media profiles

Mediatype	codec	Content container format	transport	Additional information
Audio	AAC		RTP	
Video	H.264		RTP	Recommended minimal resolution 1920x1080 (width, height)
Video	H.264/AAC	MPEG-2 TS	RTP	Recommended minimal resolution 1920x1080 (width, height)
Still image	JPEG	JPEG	RTP	Recommended minimal resolution 1920x1080 (width, height)

Copyright Open Connectivity Foundation, Inc. © 2016-2023. All rights Reserved

B.4 Additional requirements per Device Type

B.4.1 Additional requirements for Television Devices ("oic.d.tv")

A set of Resource Types have been defined that are applicable should a Device of type "oic.d.tv" need to expose behaviours typically found in "settings" menus or functions. A Device should expose one or more of these Resource Types:

- accessibility settings ("oic.r.settings.accessibility")
- broadcast settings ("oic.r.settings.broadcast")
- picture settings ("oic.r.settings.picture")
- sound settings ("oic.r.settings.sound")
- support settings ("oic.r.settings.support")
- general system settings ("oic.r.settings.system")
- ecomode ("oic.r.ecomode")

A Device may additionally expose the following Resource Types:

- software update ("oic.r.softwareupdate")
- Wi-Fi configuration ("oic.r.wificonf")

Thus enabling a complete set of Client accessible information typically found within a television system settings user interface.

Copyright Open Connectivity Foundation, Inc. © 2016-2023. All rights Reserved

Annex C
(normative)

Healthcare Device Types

C.1 Scope

This Annex defines Device Types for use in the healthcare and fitness vertical, and describes general use cases to which OCF Healthcare Devices apply, along with common functional requirements.

Although some common requirements are defined in this document, implementation is responsible for checking appropriate security, safety, environmental, and health practices, and applicable regulatory requirements from national health authorities.

C.2 Introduction to OCF healthcare Devices

This Annex references and inherits data models defined in the ISO/IEC 30118-4, to define OCF Healthcare Device Types in clause C.4.

C.3 Operational scenarios

Personal fitness and/or medical data are read by a monitoring Device (OCF Client role) from Healthcare Devices (OCF Server role), and the monitoring Device triggers appropriate actions based on the data collected. Many of the target usages are for personal health or fitness, although clinical use cases can be realized with similar modelling.

As shown in Figure C.1, data from various fitness and healthcare devices can be gathered on a smart phone for monitoring and can be transmitted to the healthcare services through a gateway or through the smartphone. The protocol to be used for transmission is defined in ISO/IEC 30118-1. Collected personal fitness and/or medical data are used for condition monitoring or medical research, receiving advice from a trainer/doctor, or triggering an emergency notification.

Copyright Open Connectivity Foundation, Inc. © 2016-2023. All rights Reserved

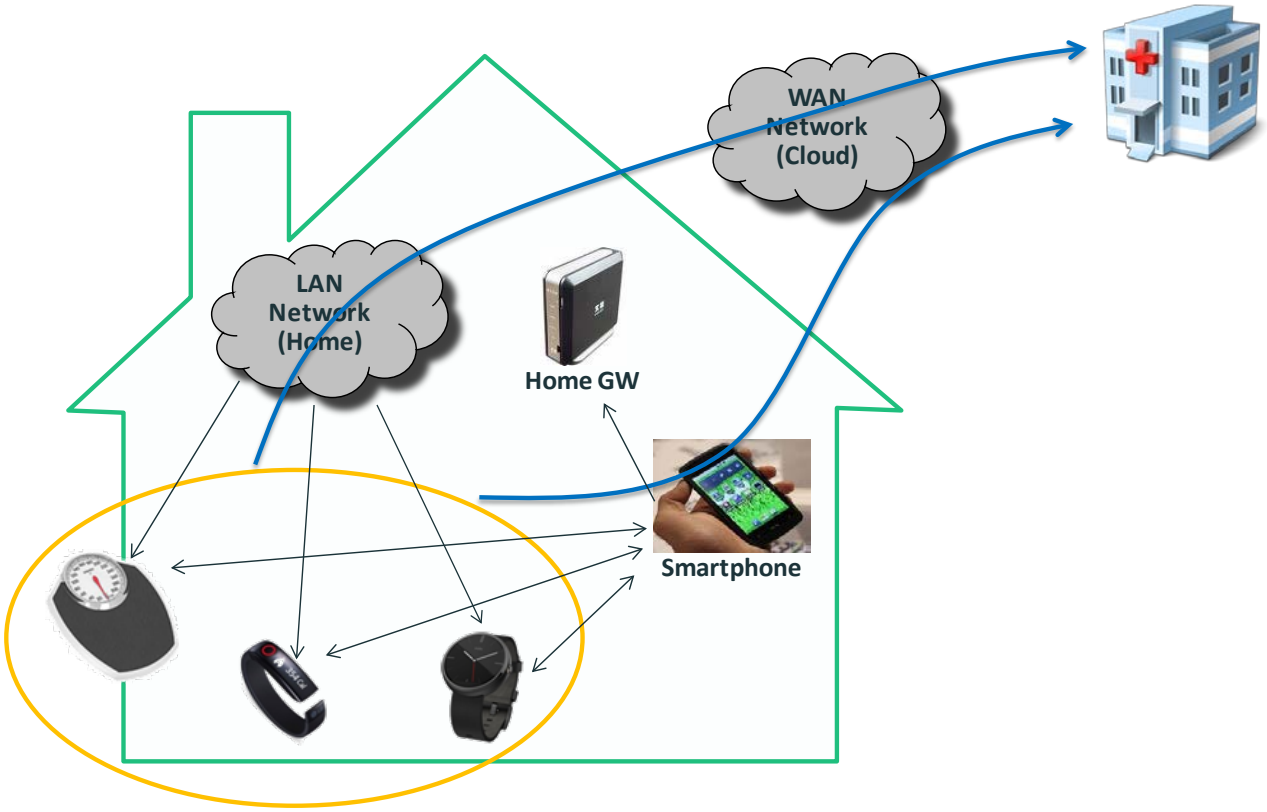

Figure C.1 – Schematic diagram of healthcare usages

C.4 Standardized Device Types

C.4.1 Introduction

OCF Healthcare Device Types specify Devices in the healthcare and fitness domains of the OCF ecosystem. The Device Type exposed by the "rt" value of /oic/d of all Healthcare Devices shall have a Resource Type value (“rt”) prefixed with "oic.d." The Healthcare Device Types are listed in Table C.1.

Table C.1 – Alphabetical list of healthcare Device Types

Clause	Device Name	Device Type ("rt")
C.4.9	Activity Tracker	oic.d.activitytracker
C.4.2	Blood Pressure Monitor	oic.d.bloodpressuremonitor
C.4.15	Body Composition Analyser	oic.d.bodycompositionanalyser
C.4.4	Body Scale	oic.d.bodyscale
C.4.5	Body Thermometer	oic.d.bodythermometer
C.4.10	CGM(Continuous Glucose Monitor)	oic.d.cgm
C.4.11	Cycling Power Meter	oic.d.cyclingpowermeter
C.4.12	Cycling Speed Sensor	oic.d.cyclingspeedsensor
C.4.13	Cycling Cadence Sensor	oic.d.cyclingcadencesensor
C.4.3	Glucose Meter	oic.d.glucosemeter
C.4.6	Heart Rate Monitor	oic.d.heartratemonitor

Copyright Open Connectivity Foundation, Inc. © 2016-2023. All rights Reserved

C.4.14	Muscle Oxygen Monitor	oic.d.muscleoxygenmonitor
C.4.7	Pulse Oximeter	oic.d.pulseoximeter
C.4.8	Sleep Monitor	oic.d.sleepmonitor

The remainder of this Annex defines Resource Types for each Device Type, but for full definitions of Resource Types, see ISO/IEC 30118-4.

Each Device Type defines a minimal set of Resource Types that are implemented by that Device Type as required Resource Types. A Healthcare Device may expose additional OCF-defined optional Resource Types. It should be noted that all Resource Types are commonly available for all Device Types, but if a Device Type aims to implement optional Resource Types related to healthcare, it shall expose such Resource Types using the definitions provided in this annex.

When a Resource Type is listed as Mandatory (M) in this Annex, the Device shall:

– expose that Atomic Measurement Resource Type in /oic/res
– expose that Resource Type as a Link in the Atomic Measurement

The mandatory Resource Types for an Atomic Measurement shall be listed in the "rts-m" Property Value.

When a Resource Type is listed as Optional (O) in this Annex, a Device may expose that Resource Type as a Link in the Atomic Measurement, or may also expose that Resource Type as a discretely discoverable Resource outside of the Atomic Measurement. For example, if a blood pressure monitor (i.e. "oic.d.bloodpressuremonitor") measures pulse rate and chooses to expose that feature over OCF, it exposes the "oic.r.pulserate" Resource Type as a Link in the blood pressure monitor Atomic Measurement ("oic.r.bloodpressuremonitor-am"). The allowed Resource Types for an instance of an Atomic Measurement (which includes both the M and O Resource Types that are implemented) shall be listed in the "rts" Property Value.

Some Resource Types are commonly used for all Healthcare Device Types; these are provided in Table C.2. Users may want to associate timestamps to the measurements when they access their healthcare information (in RFC3339 date and time format, oic.r.time.stamp). A Healthcare Device may be used by different users, so identifying a specific user with an ID may be appropriate ("oic.r.userid"). These Resource Types are exposed as Conditionally Required Resource Types of an Atomic Measurement (as defined per clause 7.8.4 of ISO/IEC 30118-1) of a specific Healthcare Device. The "rt" value of Resource Types that use Atomic Measurements are suffixed by -am (Atomic Measurements). When present in an Atomic Measurement, "oic.r.time.stamp" and "oic.r.userid" indicate the time when a sample of data is measured by a certain user.

Table C.2 – Commonly used Resource Types of healthcare Device Types

Resource Type Name	Resource Type Value	Requirement (M, S, O, CA, CR)
Observed Time	oic.r.time.stamp	O
User ID	oic.r.userid	O

It should also be noted that Resource-level and Property-level requirements can be different. All OCF Resource Types are specified using OpenAPI 2.0 and the Properties which are defined in a specific schema can either be mandatory or optional. In other words, even if a Resource Type is mandatory for a Device Type, some of its Properties may not be mandatory.

C.4.2 Blood pressure monitor

C.4.2.1 Introduction

A blood pressure monitor measures blood pressure [i.e., systolic, diastolic, and mean arterial pressure (MAP)]. Blood pressure is most frequently measured using the units of millimetres of

Copyright Open Connectivity Foundation, Inc. © 2016-2023. All rights Reserved

mercury (mmHg). Blood pressure is often denoted as 120/80 mmHg, which means systolic blood pressure of 120 and diastolic blood pressure of 80.

Table C.3 describes the Device Type for a blood pressure monitor. Table C.4 describes the Atomic Measurement that is present in all instances of a blood pressure monitor.

Table C.3 – Healthcare Device Type of blood pressure monitor

Device Type (rt)	Resource Type Name	Resource Type Value	Requirement level
oic.d. bloodpressuremonitor	Blood pressure monitor Atomic Measurement	oic.r.bloodpressuremonitor-am	M

Table C.4 – Atomic measurement of blood pressure monitor

Atomic Measurement Resource Type Value	Resource Type Name	Resource Type Value	Requirement level
oic.r. bloodpressuremonitor-am	Blood pressure	oic.r.blood.pressure	M
	Pulse rate	oic.r.pulserate	O

C.4.2.2 Required resource types

A blood pressure monitor shall expose "oic.r.blood.pressure" to report the blood pressure (systolic and diastolic) and optionally MAP.

C.4.2.3 OCF-defined optional resource types

A blood pressure monitor measures pulse rate using the "oic.r.pulserate" Resource Type. See Table C.2 for additional commonly used Resource Types that could be used here.

C.4.3 Glucose meter

C.4.3.1 Introduction

A glucose meter measures the concentration of glucose in the blood. Glucose, or blood sugar, is the human body's primary source of energy. The blood glucose level is a key parameter that diabetics measure multiple times per day.

Table C.5 describes the Device Type for a glucose meter. Table C.6 describes the Atomic Measurement that is present in all instances of a glucose meter.

Table C.5 – Healthcare Device Type of glucose meter

Device Type (rt)	Resource Type Name	Resource Type Value	Requirement level
oic.d.glucosemeter	Glucose meter Atomic Measurement	oic.r.glucosemeter-am	M

Table C.6 – Atomic measurement of glucose meter

Atomic Measurement Resource Type Value	Resource Type Name	Resource Type Value	Requirement level
oic.r.glucosemeter-am	Glucose	oic.r.glucose	M
	Context Carbohydrates	oic.r.glucose.carb	O
	Context Exercise	oic.r.glucose.exercise	O
	Hemoglobin Bound to Glucose A1c Form (HbA1c)	oic.r.glucose.hba1c	O

Copyright Open Connectivity Foundation, Inc. © 2016-2023. All rights Reserved

	Context Health	oic.r.glucose.health	O
	Context Meal	oic.r.glucose.meal	O
	Context Medication	oic.r.glucose.medication	O
	Context Sample Location	oic.r.glucose.samplelocation	O
	Context Tester	oic.r.glucose.tester	O

C.4.3.2 Required Resource Types

A glucose meter shall expose "oic.r.glucose" to report the blood glucose level in mg/dL or mmol/L.

C.4.3.3 OCF-defined optional Resource Types

A glucose meter measures context carbohydrates, then it shall expose the context carbohydrates using "oic.r.glucose.carb" Resource Type.

A glucose meter measures context exercise using the "oic.r.glucose.exercise" Resource Type.

A glucose meter measures Hemoglobin Bound to Glucose A1c Form (HbA1c) using the "oic.r.glucose.hba1c" Resource Type.

A glucose meter measures context health using the "oic.r.glucose.health" Resource Type.

A glucose meter measures context meal using the "oic.r.glucose.meal" Resource Type.

A glucose meter measures context medication using the "oic.r.glucose.medication" Resource Type.

A glucose meter measures context sample location using the "oic.r.glucose.samplelocation" Resource Type.

A glucose meter measures context tester using the "oic.r.glucose.tester" Resource Type.

See Table C.2 for additional commonly used Resource Types that could be used here.

C.4.4 Body scale

C.4.4.1 Introduction

A body scale measures the weight. The weight is most frequently measured using the units of kilograms (kg) or pounds (lb).

Table C.7 describes the Device Type for a body scale. Table C.8 describes the Atomic Measurement that is present in all instances of a body scale.

Table C.7 – Healthcare Device Type of body scale

Device Type (rt)	Resource Type Name	Resource Type Value	Requirement level
oic.d.bodyscale	Body scale Atomic Measurement	oic.r.bodyscale-am	M

Table C.8 – Atomic measurement type of body scale

Atomic Measurement Resource Type Value	Resource Type Name	Resource Type Value	Requirement level
oic.r.bodyscale-am	Weight	oic.r.weight	M
	Body Mass Index (BMI)	oic.r.bmi	O

Copyright Open Connectivity Foundation, Inc. © 2016-2023. All rights Reserved

	Height	oic.r.height	O
	Body Fat	oic.r.body.fat	O
	Body Water	oic.r.body.water	O
	Body Soft Lean Mass	oic.r.body.slm	O
	Body Fat Free Mass	oic.r.body.ffm	O

C.4.4.2 Required Resource Types

A body scale shall expose "oic.r.weight" to report the body weight of a person.

C.4.4.3 OCF-defined optional Resource Types

A body scale measures height using the "oic.r.height" Resource Type. Especially, a body scale measures the height if BMI is also reported because the height is used when a body scale measures BMI.

A body scale measures Body Mass Index (BMI) using the "oic.r.bmi" Resource Type.

A body scale measures body fat using the "oic.r.body.fat" Resource Type.

A body scale measures body water using the "oic.r.body.water" Resource Type.

A body scale measures body soft lean mass using the "oic.r.body.slm" Resource Type.

A body scale measures body fat free mass using the "oic.r.body.ffm" Resource Type.

See Table C.2 for additional commonly used Resource Types that could be used here.

C.4.5 Body thermometer

C.4.5.1 Introduction

A body thermometer measures the temperature at some point. In general, the body thermometer is placed at the measurement site for sufficient time for the measuring probe to reach the same temperature as the body site, and when stable, a direct digital reading of the probe temperature is taken.

Table C.9 describes the Device Type for a body thermometer. Table C.10 describes the Atomic Measurement that is present in all instances of a body thermometer.

Table C.9 – Healthcare Device Type of body thermometer

Device Type (rt)	Resource Type Name	Resource Type Value	Requirement level
oic.d.bodythermometer	Body thermometer Atomic Measurement	oic.r.bodythermometer-am	M

Table C.10 – Atomic measurement type of body thermometer

Atomic Measurement Resource Type Value	Resource Type Name	Resource Type Value	Requirement level
oic.r.bodythermometer-am	Temperature	oic.r.temperature	M
	Body Location for temperature	oic.r.body.location.temperature	O

C.4.5.2 Required Resource Types

A body thermometer shall expose "oic.r.body.temperature" to report the temperature level and the unit of a measured temperature is reported either in C, F or K.

Copyright Open Connectivity Foundation, Inc. © 2016-2023. All rights Reserved

C.4.5.3 OCF-defined optional Resource Types

A body thermometer measures temperature site using the "oic.r.body.location.temperature" Resource Type.

See Table C.2 for additional commonly used Resource Types that could be used here.

C.4.6 Heart rate monitor

C.4.6.1 Introduction

A heart rate monitor measures heart rate. Heart rate is most frequently measured using the units of beats per minute (bpm). While normal heart rate varies from person to person depending on the individual, age, body size, heart conditions, posture, medication use, etc., normal resting heart rate range for adults is from 60 to 100 according to the American Heart Association.

Table C.11 describes the Device Type for a heart rate monitor. Table C.12 describes the Atomic Measurement that is present in all instances of a heart rate monitor.

Table C.11 – Healthcare Device Type of heart rate monitor

Device Type (rt)	Resource Type Name	Resource Type Value	Requirement level
oic.d.heartratemonitor	Heart Rate Monitor Atomic Measurement	oic.r.heartratemonitor -am	M

Table C.12 – Atomic measurement of heart rate monitor

Atomic Measurement Resource Type Value	Resource Type Name	Resource Type Value	Requirement level
oic.r.heartratemonitor -am	Heart Rate	oic.r.heartrate	M

C.4.6.2 Required Resource Types

A heart rate monitor shall expose "oic.r.heartrate" to report the heart rate of a person.

C.4.6.3 OCF-defined Optional Resource Types

See Table C.2 for additional commonly used Resource Types that could be used here.

C.4.7 Pulse oximeter

C.4.7.1 Introduction

A pulse oximeter measures peripheral capillary oxygen saturation (SpO2), an estimate of the amount of oxygen in the blood. Oxygen saturation is most frequently measured using percentage (%). Normal oxygen saturation is 95% or above according to the World Health Organization (WHO).

Table C.13 describes the Device Type for a pulse oximeter. Table C.14 describes the Atomic Measurement that is present in all instances of a pulse oximeter.

Table C.13 – Healthcare Device Type of pulse oximeter

Device Type (rt)	Resource Type Name	Resource Type Value	Requirement level
oic.d.pulseoximeter	Pulse Oximeter Atomic Measurement	oic.r.pulseoximeter-am	M

Copyright Open Connectivity Foundation, Inc. © 2016-2023. All rights Reserved

Table C.14 – Atomic measurement of pulse oximeter

Atomic Measurement Resource Type Value	Resource Type Name	Resource Type Value	Requirement level
oic.r.pulseoximeter-am	SpO2	oic.r.spo2	M
	Pulse Rate	oic.r.pulserate	M
	Pulsatile Occurrence	oic.r.pulsatileoccurrence	O
	Pulsatile Characteristic	oic.r.pulsatilecharacteristic	O

C.4.7.2 Required Resource Types

A pulse oximeter shall expose "oic.r.spo2" to report the oxygen saturation of a person.

A pulse oximeter shall expose "oic.r.pulserate" to report the pulse rate of a person.

C.4.7.3 OCF-defined Optional Resource Types

A pulse oximeter measures pulsatile occurrence using the "oic.r.pulsatileoccurrence" Resource Type.

A pulse oximeter measures pulsatile characteristic using the "oic.r.pulsatilecharacteristic" Resource Type.

See Table C.2 for additional commonly used Resource Types that could be used here.

C.4.8 Sleep monitor

C.4.8.1 Introduction

A sleep monitor measures the duration of each one of the sleep stages, and can also compute a “Sleep Score” from these data. The stages of sleep are: NREM stage 1 (Light Sleep stage 1), NREM stage 2 (Light Sleep stage 2), NREM stage 3 (Deep Sleep stage 1), NREM stage 4 (Deep Sleep stage 2), REM.

A night of sleep is composed of several sleep cycles, with each sleep cycle progressing from Light Sleep to Deep Sleep, before reversing back from Deep Sleep to Light Sleep, ending with REM.
The first cycle takes about 90 minutes. After that, the cycles average between 100 minutes and 120 minutes. Typically, an individual will go through 4 to 5 sleep cycles per night. Dreams occur during REM stages.

NREM stage 4 is not recognized in every country: in 2007, the USA merged NREM stages 3 and 4 into only one stage, NREM stage 3, thus effectively removing NREM stage 4.

Light Sleep consists of NREM stages 1 and 2. Deep Sleep consists of NREM stages 3 and 4.

Table C.15 describes the Device Type for a sleep monitor. Table C.16 describes the Atomic Measurement that is present in all instances of a sleep monitor.

Table C.15 – Healthcare Device Type of sleep monitor

Device Type (rt)	Resource Type Name	Resource Type Value	Requirement level
oic.d.sleepmonitor	Sleep Monitor Atomic Measurement	oic.r.sleepmonitor-am	M

Copyright Open Connectivity Foundation, Inc. © 2016-2023. All rights Reserved

Table C.16 – Atomic measurement of sleep monitor

Atomic Measurement Resource Type Value	Resource Type Name	Resource Type Value	Requirement level
oic.r.sleepmonitor-am	Sleep	oic.r.sleep	M
	Heart Rate	oic.r.heartrate	O

C.4.8.2 Required Resource Types

A sleep monitor shall expose "oic.r.sleep" to report the time spent in the Awake, NREM1, NREM2, NREM3 and REM stages, and optionally the time spent in the NREM4, Light Sleep, Deep Sleep stages, and the sleep score.

C.4.8.3 OCF-defined Optional Resource Types

A sleep monitor measures the heartrate using the "oic.r.heartrate" Resource Type.

See Table C.2 for additional commonly used Resource Types that could be used here.

C.4.9 Activity tracker

C.4.9.1 Introduction

An Activity Tracker measures a user's activities. An Activity Tracker shows a user's current activity type, accumulated step counts per day since the beginning of the day (or last reset), consumed calories per day since the beginning of the day (or last reset), and alarm status.

Table C.17 describes the Device Type for an activity tracker. Table C.18 describes the Atomic Measurement that is present in all instances of an activity tracker.

Table C.17 – Healthcare Device Type of activity tracker

Device Type (rt)	Resource Type Name	Resource Type Value	Requirement level
oic.d.activitytracker	Activity Tracker Atomic Measurement	oic.r.activitytracker-am	M
	Clock	oic.r.clock	O
	Battery	oic.r.energy.battery	O
	Alarm	oic.r.alarm	O

Table C.18 – Atomic measurement of activity tracker

Atomic Measurement Resource Type Value	Resource Type Name	Resource Type Value	Requirement level
oic.r.activitytracker-am	Activity	oic.r.activity	M
	Heartrate	oic.r.heartrate	O

C.4.9.2 Required Resource Types

An activity tracker shall expose "oic.r.activity" to report the activity of a person, and optionally the number of steps per day or since last reset, plus the consumed calories per day or since last reset.

C.4.9.3 OCF-defined Optional Resource Types

An activity tracker manages the alarm status using the "oic.r.alarm" Resource Type.

An activity tracker measures heart rate using the "oic.r.heartrate" Resource Type.

An activity tracker measures time using the "oic.r.clock" Resource Type.

An activity tracker measures battery status using the "oic.r.energy.battery" Resource Type.

Copyright Open Connectivity Foundation, Inc. © 2016-2023. All rights Reserved

See Table C.2 for additional commonly used Resource Types that could be used here.

C.4.10 CGM (Continuous Glucose Meter)

C.4.10.1 Introduction

A CGM is a device that measures the concentration of glucose in the blood, typically measured from interstitial fluid (ISF). The glucose concentration is available on a continual basis at a periodic interval from a sensor. Glucose, or blood sugar, is the human body's primary source of energy. Frequent measurements provided by a CGM give a patient greater insight as to the fluctuations in blood glucose levels throughout the day, and in turn, can reduce the risk of developing diabetic complications.

Table C.19 describes the Device Type for a CGM. Table C.20 describes the Atomic Measurement that is present in all instances of a CGM.

Table C.19 – Healthcare Device Type of CGM

Device Type (rt)	Resource Type Name	Resource Type Value	Requirement level
oic.d.cgm	CGM Atomic Measurement	oic.r.cgm-am	M
	CGM Sampling Interval	oic.r.cgm.samplinginterval	M
	CGM Calibration	oic.r.cgm.calibrate	M
	CGM Threshold	oic.r.cgm.threshold	M
	CGM Status	oic.r.cgm.status	O
	Battery	oic.r.energy.battery	O

Table C.20 – Atomic measurement of CGM

Atomic Measurement Resource Type Value	Resource Type Name	Resource Type Value	Requirement level
oic.r.cgm-am	Glucose	oic.r.glucose	M
	CGM Sensor	oic.r.cgm.sensor	O

C.4.10.2 Required Resource Types

A CGM shall expose "oic.r.glucose" to report the blood glucose level in mg/dL or mmol/L. A CGM shall manage (RETRIEVE and UPDATE) the CGM Sampling Interval using the "oic.r.cgm.samplinginterval" Resource Type.

A CGM shall manage (RETRIEVE and UPDATE) CGM Calibration using the "oic.r.cgm.calibrate" Resource Type.

A CGM shall manage (RETRIEVE and UPDATE) CGM Threshold using the "oic.r.cgm.threshold" Resource Type.

C.4.10.3 OCF-defined Optional Resource Types

A CGM measures CGM sensor information using the "oic.r.cgm.sensor" Resource Type.

A CGM measures CGM Status using the "oic.r.cgm.status" Resource Type.

A CGM measures Battery using the "oic.r.energy.battery" Resource Type.

Copyright Open Connectivity Foundation, Inc. © 2016-2023. All rights Reserved

See Table C.2 for additional commonly used Resource Types that could be used here.

C.4.11 Cycling power meter

C.4.11.1 Introduction

A cycling power meter is a sensor that is mounted on a bicycle and that allows the cyclist to measure his or her power output, which is used to move the bike forward and is measured in Watts. The meter transmits the information to OCF Clients. A cycling power meter uses different measurements to determine power:

– measure power directly
– measure torque and rotational velocity at the crank
– measure torque and rotational velocity at the wheel

Possible methods used by a cycling power meter for information updates include:

– Event-Synchronous Update e.g. the power information is updated each time the power sensor detects a new crank rotation.
– Time-Synchronous Update e.g. the power information is updated at 1Hz.

Table C.21 describes the Device Type for a cycling power meter.

Table C.21 – Healthcare Device Type of cycling power meter

Device Type (rt)	Resource Type Name	Resource Type Value	Requirement level
oic.d.cyclingpowermeter	Cycling power	oic.r.cyclingpower	M
	Torque	oic.r.torque	O
	Cadence	oic.r.cadence	O

C.4.11.2 Required Resource Types

A cycling power meter shall expose "oic.r.cyclingpower" to report the measured power output (which is the power used to move the bike forward).

C.4.11.3 OCF-defined Optional Resource Types

A cycling power meter measures the torque at the crank or the wheel using the "oic.r.torque" Resource Type.

A cycling power meter measures the cadence, which is the number of revolutions of crank per minute when cyclists pedal the pedals, at the crank or the wheel using the "oic.r.cadence" Resource Type.

See Table C.2 for additional commonly used Resource Types that could be used here.

C.4.12 Cycling speed sensor

C.4.12.1 Introduction

Cycling speed sensors are devices mounted on a bicycle that measure the speed the bicycle is travelling. This is typically done using a magnet mounted on the wheel spokes and a sensor on the bicycle frame that senses the magnet passing.

Table C.22 describes the Device Type for a cycling speed sensor.

Note: The notion ‘Sensor’ of the Device Name (Cycling Speed Sensor) is not associated with ‘sensor’, which is an OCF standard OCF Interfaces defined in ISO/IEC 30118-1.

Copyright Open Connectivity Foundation, Inc. © 2016-2023. All rights Reserved

Table C.22 – Healthcare Device Type of cycling speed sensor

Device Type (rt)	Resource Type Name	Resource Type Value	Requirement level
oic.d. cyclingspeedsensor	Speed	oic.r.speed	M

C.4.12.2 Required Resource Types

A cycling speed sensor shall expose "oic.r.speed" to report the speed the bicycle is travelling.

C.4.12.3 OCF-defined Optional Resource Types

See Table C.2 for additional commonly used Resource Types that could be used here

C.4.13 Cycling cadence sensor

C.4.13.1 Introduction

Cycling cadence sensors measure the speed at which the user is pedaling, typically using a magnet attached to the pedal shaft and a sensor mounted on the frame.

Table C.23 describes the Device Type for a cycling speed sensor.

Note: The notion 'Sensor' of the Device Name (Cycling Cadence Sensor) is not associated with 'sensor', which is an OCF standard OCF Interfaces defined in ISO/IEC 30118-1.

Table C.23 – Healthcare Device Type of cycling cadence sensor

Device Type (rt)	Resource Type Name	Resource Type Value	Requirement level
oic.d. cyclingcadencesensor	Cadence	oic.r.cadence	M

C.4.13.2 Required Resource Types

A cycling cadence sensor shall expose "oic.r.cadence" to report the cadence, which is the number of revolutions of crank per minute when cyclists pedal the pedals.

C.4.13.3 OCF-defined Optional Resource Types

See Table C.2 for additional commonly used Resource Types that could be used here

C.4.14 Muscle oxygen monitor

C.4.14.1 Introduction

A muscle oxygen monitor provides an indication of the muscle oxygen saturation (SmO2) and is used by athletes to monitor the intensity of their training, and by coaches and physiotherapists to identify which and when muscles are being used.

SmO2 is a measure of the percentage of hemoglobin that is saturated with oxygen in the capillaries of a muscle. SmO2 decreases as a muscle does work, for example, when a person is exercising. SmO2 increases when blood circulation brings new oxygen to the muscle. SmO2 varies from muscle to muscle depending on which muscle is used to perform a particular action.

Table C.24 describes the Device Type for a muscle oxygen monitor.

Table C.24 – Healthcare Device Type of muscle oxygen monitor

Device Type (rt)	Resource Type Name	Resource Type Value	Requirement level
oic.d.muscleoxygenmonitor	Muscle Oxygen Saturation	oic.r.muscleoxygensaturation	M

Copyright Open Connectivity Foundation, Inc. © 2016-2023. All rights Reserved

C.4.14.2 Required Resource Types

A muscle oxygen monitor shall expose "oic.r.muscleoxygensaturation" to report the muscle oxygen saturation (SmO2).

C.4.14.3 OCF-defined Optional Resource Types

See Table C.2 for additional commonly used Resource Types that could be used here.

C.4.15 Body composition analyser

C.4.15.1 Introduction

A body composition analyser is a device that analyzes the composition of a human body including body fat, body height, body weight, etc. A body composition analyser uses various techniques for measuring the composition of a human body. For example, body impedance analysis measures the bioelectrical impedance with electrical signals sent from pairs of probes (typically metal electrodes) applied at the feet and/or hands and evaluates the body composition from these impedances.

Table C.25 describes the Device Type for a body composition analyser. Table C.26 describes the Atomic Measurement that is present in all instances of a body composition analyser.

Table C.25 – Healthcare Device Type of body composition analyser

Device Type (rt)	Resource Type Name	Resource Type Value	Requirement level
oic.d.bodycompositionanalyser	Body composition analyser Atomic Measurement	oic.r. bodycompositionanalyser-am	M

Table C.26 – Atomic measurement type of body composition analyser

Device Type (rt)	Resource Type Name	Resource Type Value	Requirement level
oic.r. bodycompositionanalyser-am	Body fat	oic.r.body.fat	M
	Height	oic.r.height	M
	Weight	oic.r.weight	M
	Body Fat Free Mass	oic.r.body.ffm	O
	Body Soft Lean Mass	oic.r.body.slm	O
	Body Water	oic.r.body.water	O
	Body Mass Index (BMI)	oic.r.bmi	O

C.4.15.2 Required Resource Types

A body composition analyser shall expose "oic.r.body.fat" to report the body fat of a person.

A body composition analyser shall expose "oic.r.height" to report the height of a person.

A body composition analyser shall expose "oic.r.weight" to report the weight of a person.

C.4.15.3 OCF-defined Optional Resource Types

A body composition analyser measures body fat free mass using the "oic.r.body.ffm" Resource Type.

A body composition analyser measures body soft lean free mass using the "oic.r.body.slm" Resource Type.

Copyright Open Connectivity Foundation, Inc. © 2016-2023. All rights Reserved

A body composition analyser measures body water using the "oic.r.body.water" Resource Type.

A body composition analyser measures Body Mass Index (BMI) using the "oic.r.bmi" Resource Type.

See Table C.2 for additional commonly used Resource Types that could be used here.

Copyright Open Connectivity Foundation, Inc. © 2016-2023. All rights Reserved

Annex D
(normative)

Industrial Device Types

D.1 Operational scenarios

The Optical RFID Tag and Optical RFID Station Resource Types describe the attributes associated with an optical augmented RFID system of a smart factory environment for integrating the observation and the actuation in production lines of plants.

Commercial observation is the real-time monitoring to collect broad series of data from each product on the production line and machineries from the plant floor. This collected big data can be sent to OCF cloud and/or manufacturer's internal OCF network where it is analysed and used to estimate overall production flow, productivity and identify failure parts.

Commercial actuation is the real-time interaction to take actions on system failures such as defected product's isolation, possibly sending the product into a repair line, alarming, such as production line status, display panels and hazard issues such as fire and flood of the Commercial environment by sending actuation requests to actuators directly and/or to client(s).

Optical augmented RFID reader and tag assist in production line control utilizing the OCF ecosystem for smart factory environment. The optical augmented RFID reader is represented by the RFID Station Resource Type, the tag by the RFID Tag Resource Type.

In the RFID Tag Resource Type, the tagid is an integer showing the currently read optical augmented RFID tag's identity information.

In the RFID Station Resource Type, the process represents the stage of the product in the product line which has an optical RFID tag on its body. Event is represented by a Boolean value set to "True" or "False" alarming the issue when additional action is requested for the tagged product. actionrequest represents necessary actions like the isolation of the product, to send the product back to another specific line to modify or fix an issue.

Figure D.1 shows a normal, non-error case process flow in the smart factory. Blue arrow lines are where OCF communication exists. ORFID tag ID is only readable to maintain consistent identity.

Copyright Open Connectivity Foundation, Inc. © 2016-2023. All rights Reserved

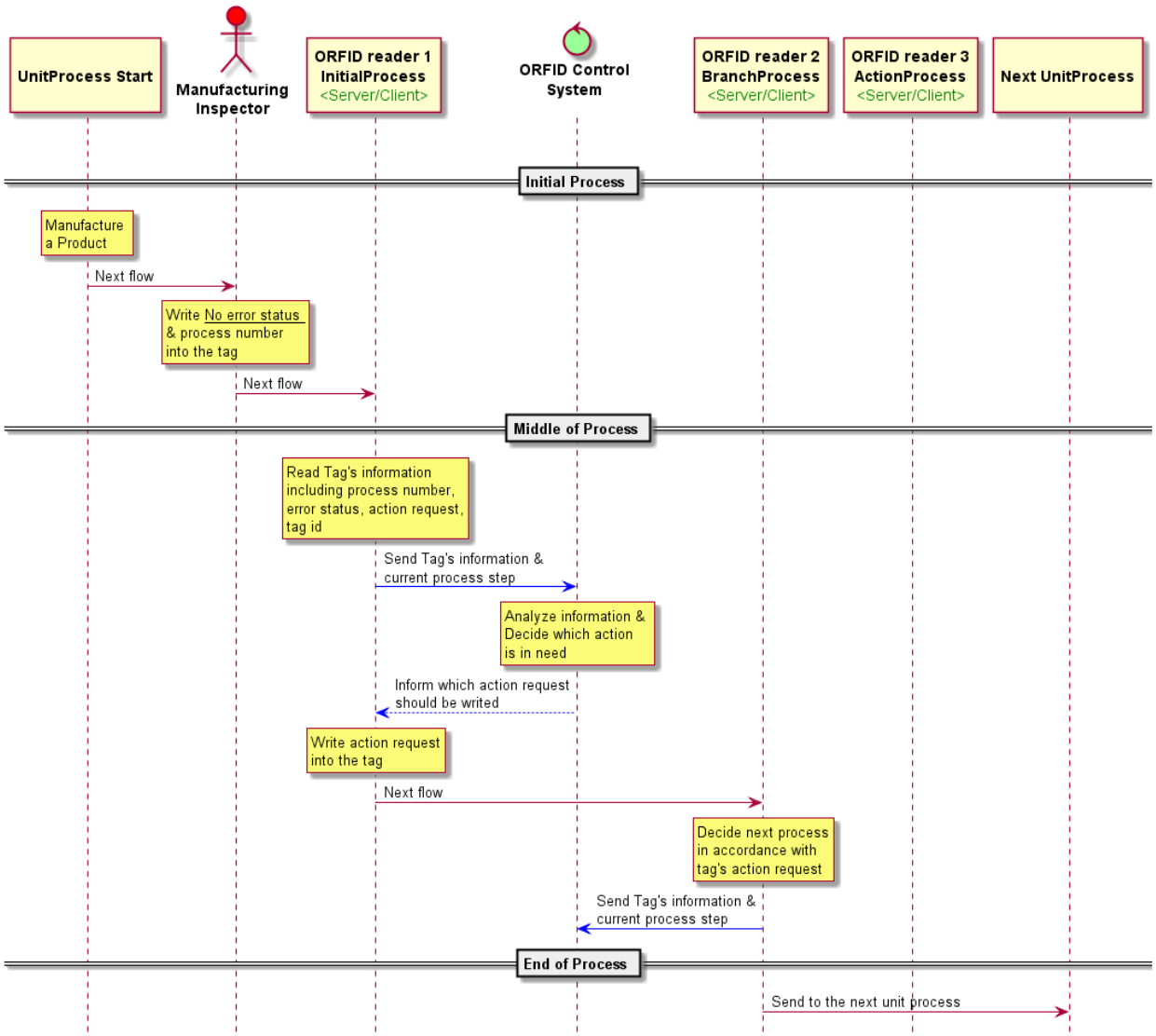

Figure D.1 – Normal process scheme of optical augmented RFID in smart factory environment

Figure D.2 shows product error control scheme in the smart factory. Blue arrow lines are where OCF communication exists. ORFID tag ID is only readable to maintain consistent identity.

Copyright Open Connectivity Foundation, Inc. © 2016-2023. All rights Reserved

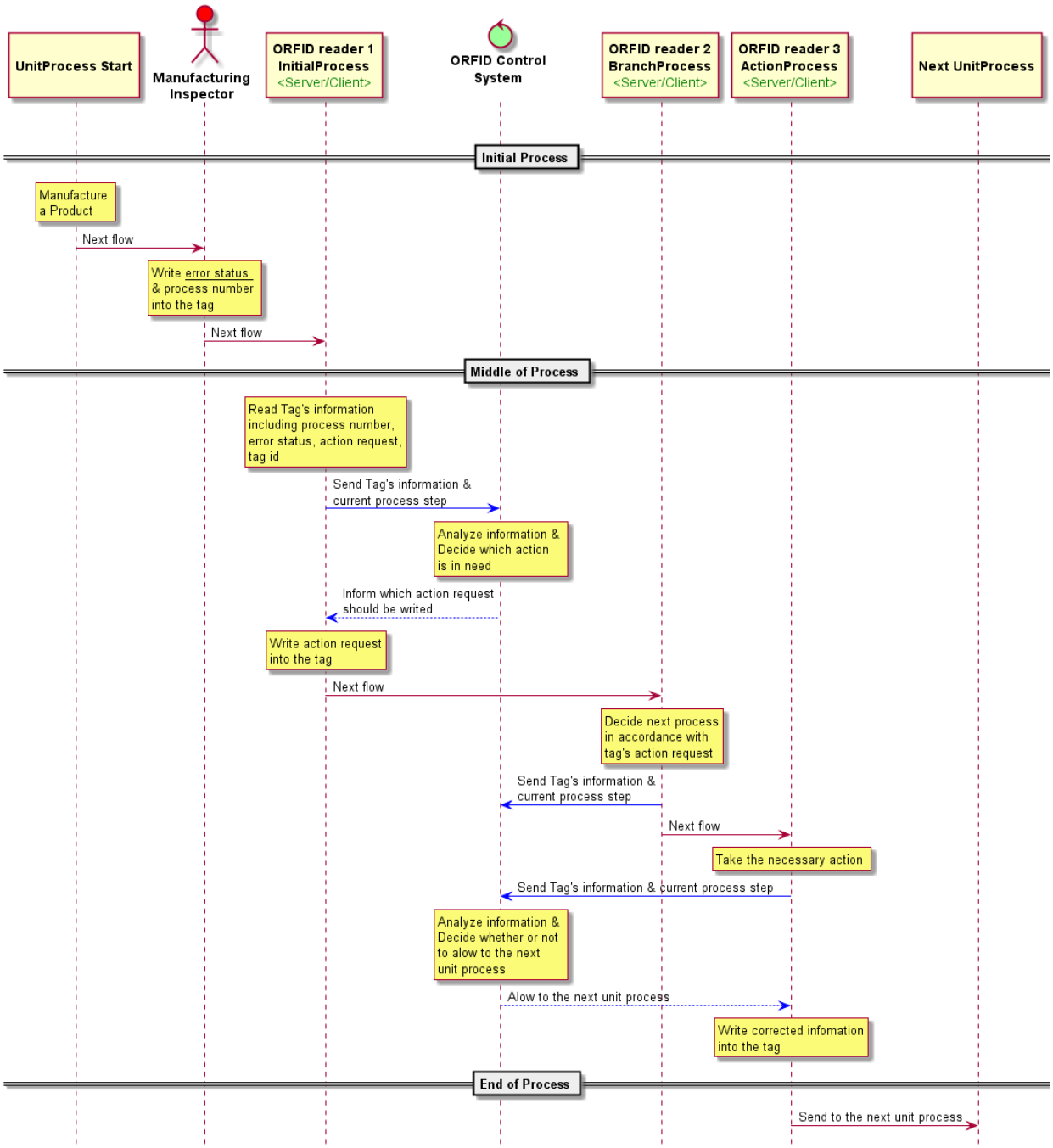

Figure D.2 – Abnormal process scheme of optical augmented RFID in smart factory environment

Manufacturing Inspector writes "error status" and "process number" into the tag after manufacturing a product. ORFID reader1 reads Tag's information and sends the information including current process step to ORFID Control System. Then ORFID reader1 waits until ORFID Control System replies. When ORFID reader1 receives "action request" from ORFID Control System. ORFID reader1 writes "action request" into the tag.

ORFID reader2 located at the "BranchProcess" line decides next flow in accordance with tag's "action request" information then it sends Tag's information and current process step to ORFID Control System, and sends the product to the right flow.

Copyright Open Connectivity Foundation, Inc. © 2016-2023. All rights Reserved

If the product has an error, the product gets necessary action at "ActionProcess" line. Then ORFID reader3 sends repaired product's information. Then ORFID reader3 waits until ORFID Control System replies. When ORFID reader3 receives instruction from ORFID Control System for the next flow, ORFID reader3 sends the product according to instruction.

D.2 Industrial required resources per Device Type

Device Types may mandate that specific Resources be implemented. The required Resource per Device Type where mandated by the Industrial vertical is listed in Table B.1.

Table D.1 – Alphabetical list of Device Types ("rt"), including required resources for Industrial

Device Name (informative)	Device Type ("rt") (Normative)	Required Resource name	Required Resource Type
Optical augmented RFID Reader	oic.d.orfid	Optical RFID Tag	oic.r.orfid.tag
		Optical RFID Station	oic.r.orfid.station

Copyright Open Connectivity Foundation, Inc. © 2016-2023. All rights Reserved

Annex E
(normative)

PV (Photovoltaic) system Device Types

E.1 Scope

This Annex defines Device Types for use in PV (Photovoltaic) systems and describes general use cases to which OCF PV system Devices apply, along with common functional requirements. This Annex considers one of the typical PV system configurations, which is composed of one or more PV array systems, battery systems, inverters, and circuit breakers.

E.2 Operational scenarios

An electrical grid facility can be classified into utility side and customer sides. The utility side facility includes electricity generation, transmission, and distribution. The customer side facility includes high and low voltage equipment, distributed renewable energy equipment, and so on. Figure E.1 shows the overall classification of an electrical grid facility. The utility side facility is generally managed by using IEC 61850 (Communication networks and systems for power utility automation) series standards. Especially, ISO/IEC 61850-7-1 defines the data models for electrical equipment for the utility side. OCF defines the data models for devices in the residential environment, so electrical equipment in the customer side of the electrical grid facility also needs to be defined. Since electrical equipment in the utility side uses data models defined in IEC 61850 standards, customer side equipment also needs to be defined with consideration to IEC 61850 data models.

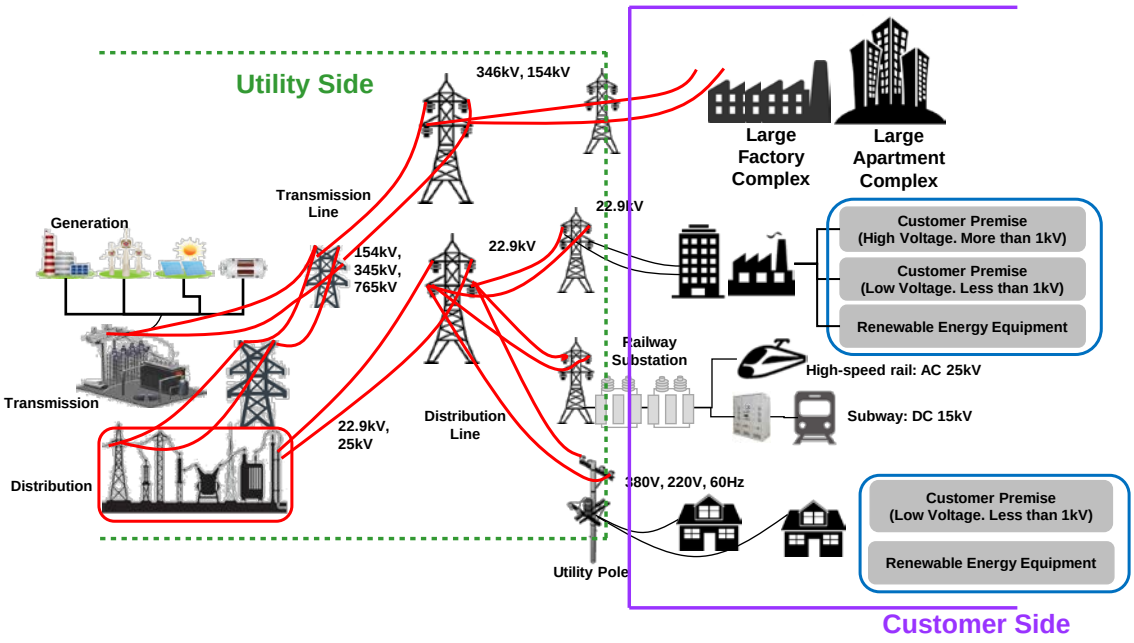

Figure E.1 – Classification of electrical grid facility

Figure E.2 depicts a typical PV system configuration. As shown in the figure, a PV system consists of one or more PV array systems, DC (Direct Current)/AC (Alternating Current) inverters, battery systems, and circuit breakers. A PV array system converts the sun's rays into electricity and the generated DC current is converted into AC current by a DC/AC inverter. A battery system may be used to store generated electricity and discharge it to the electrical grid later. A circuit breaker is

Copyright Open Connectivity Foundation, Inc. © 2016-2023. All rights Reserved

installed in order to disconnect the circuit between the PV system and the internal distribution grid. In this use case, the PV array system, battery system, DC/AC inverter, and circuit breaker are considered.

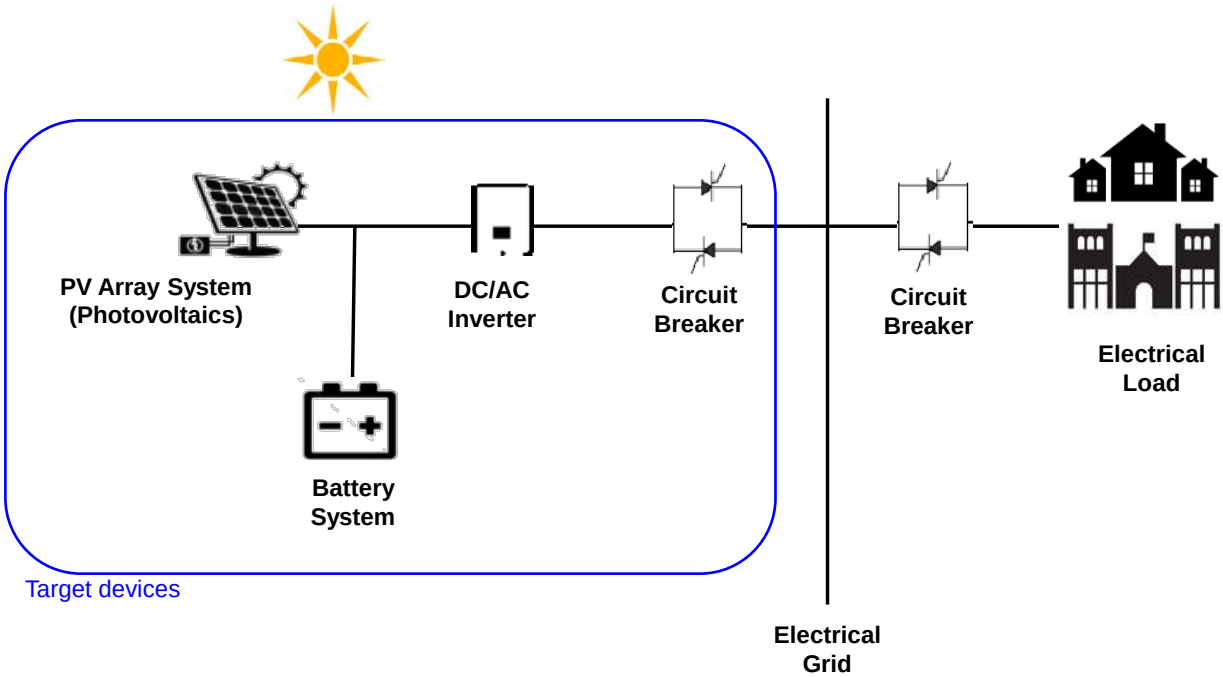

Figure E.2 – Typical PV system configuration

Figure E.3 shows the detailed configuration of the PV array system. The PV panel is composed of a durable glass panel (array) and a rigid frame made up of durable units (modules) after the unit cells are integrated and electrically connected. The PV array is connected through the connection terminal and the connection terminal monitors the status of each PV array. The connection terminal passes through the inverter before passing AC current to the electrical grid.

Copyright Open Connectivity Foundation, Inc. © 2016-2023. All rights Reserved

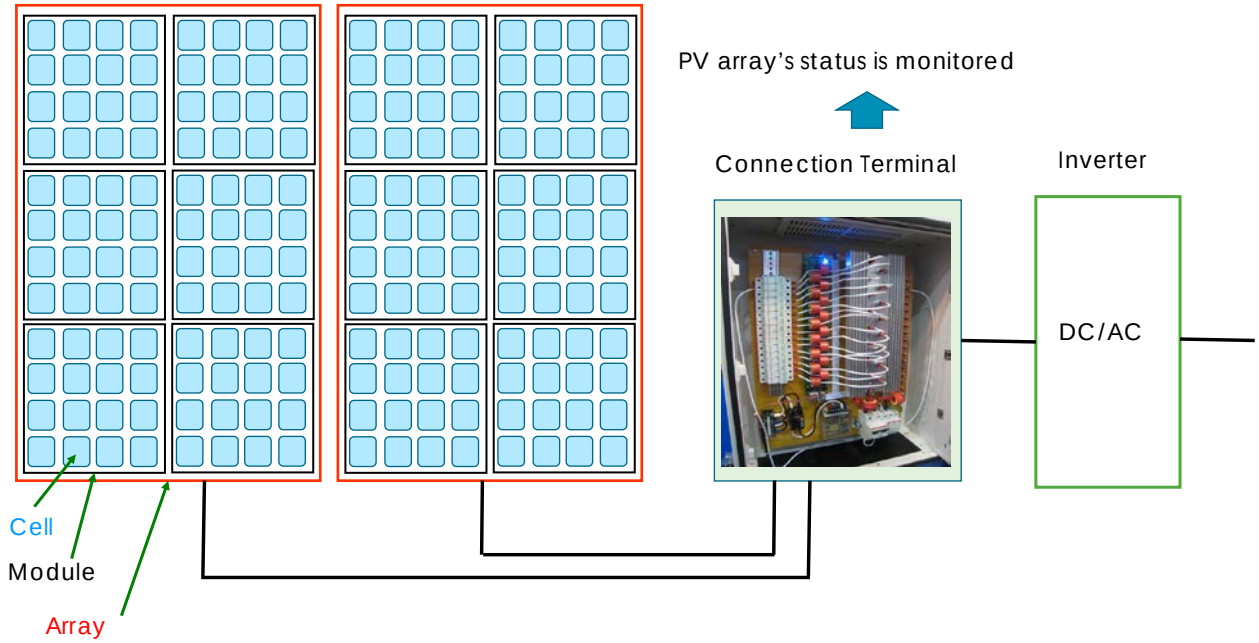

Figure E.3 – Detailed configuration of PV array system

E.3 Standard Device Types

Table E.1 lists the brief explanation of the function and required resources of PV system Devices. Table E.2 lists PV system Device Types. The Device Type exposed by the "rt" value of /oic/d of all PV system Devices shall have a Resource Type value ("rt") prefixed with "oic.d.".

Table E.1 – Function and required resources for PV system Device Types

Device Name	Roles of Device	Required Resource and Function
Circuit Breaker	Functions for the control and monitoring of circuit breakers	Circuit breaker: describes circuit breakers used in the protection of the PV system
Battery System	Functions required to store excess energy produced by the PV system. Energy storage in PV systems is usually done with batteries	Battery: battery if needed for energy storage
Inverter	Functions for the control and monitoring of the DC/AC inverter	Inverter: converts DC to AC
PV Array System	Functions to maximize the power output of the PV array	PV Connection Terminal: PV array(s) is connected and status is monitored

Table E.2 – List of PV system Device Types

Device Name	Device Type (rt)	Required Resource Name	Required Resource Type
Circuit Breaker	oic.d.circuitbreaker	circuit breaker	oic.r.circuitbreaker
Battery System	oic.d.battery	battery	oic.r.energy.battery
Inverter	oic.d.inverter	inverter	oic.r.inverter

Copyright Open Connectivity Foundation, Inc. © 2016-2023. All rights Reserved

PV Array System	oic.d.pvarraysystem	PV connection terminal	oic.r.pvconnectionterminal

Copyright Open Connectivity Foundation, Inc. © 2016-2023. All rights Reserved

Annex FAnnex F
(normative)

Fire Alarm system Device Types

F.1 Scope

This Annex defines Device Types for use in fire alarm systems and describes use cases to which fire alarm system devices apply to the smart home and building. The fire alarm system considered in this Annex is composed of a fire alarm control unit, fire detection devices, and fire alarm devices.

•

F.2 Operational scenarios

Generally, the residential house is classified into two types; single-family house and apartment house. In the case of a single-family house, there is a single owner who is fully responsible for managing and controlling the fire alarm systems and devices. Otherwise, the apartment house is shared by different owners who are responsible for their own rooms so the manager is required to manage and control the fire alarm system of the entire building including sharing facilities such as the elevator, lobby, etc. The fire alarm system is deployed in a centralized manner, in which all devices are connected to a control unit called the fire alarm control unit. Fire alarm systems for apartment houses also can adapt to the commercial building scenario. The entire fire alarm system includes fire detectors, indicators, and protection devices. In this Annex, our initial scope is limited to the centralized control unit, detectors, and indicators.

Figure F. 1 shows the deployment scenario of a fire alarm system in smart home/building. Design, operation, and management of fire alarm systems and devices should be following ISO 7240(Fire detection and alarm systems) series standards. To design a system, ISO 7240-1 defines fire zones which are sub-division of premises distinguishable areas separately from other subdivisions. Each fire zone has fire detection devices and alarm devices. For monitoring and control of these devices with separating zone, ISO 7240-2 defines fire indication and alarm control functions for a centralized fire management system called a fire alarm control unit. The fire alarm control unit also manages fire alarm states by six conditions and routing fire detection signals from fire detection devices to fire alarm devices and external (i.e., manager, fire station).

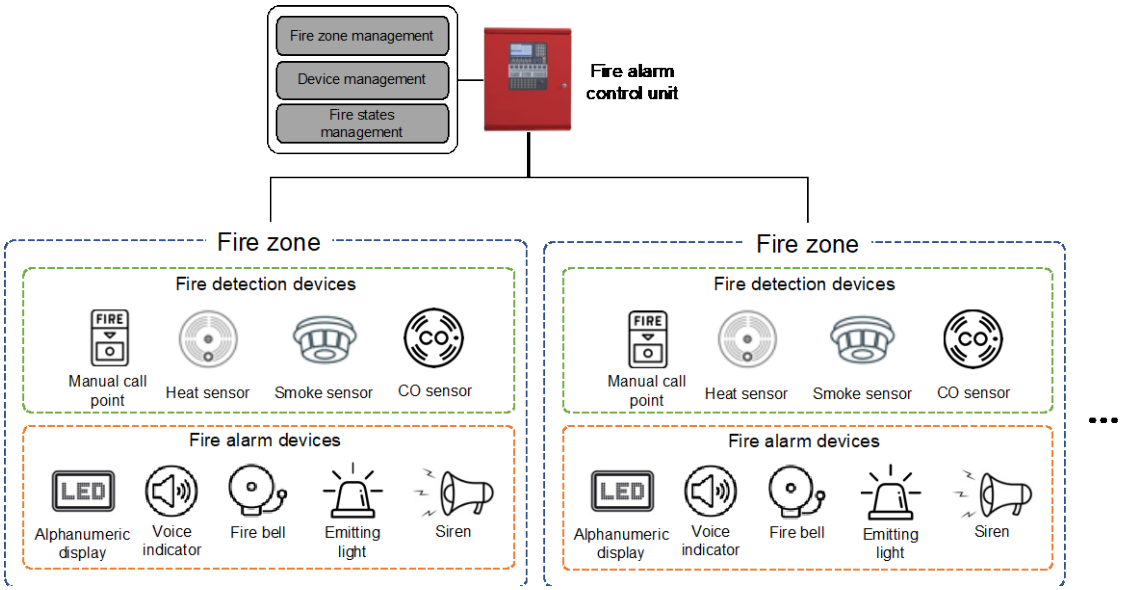

Figure F. 1 – Deployment scenario of the fire alarm system in smart home/building

Copyright Open Connectivity Foundation, Inc. © 2016-2023. All rights Reserved

Figure F. 2 shows example message flows for setting the fire alarm system and operating it when a fire is detected. When a fire detection device and fire alarm device (OCF Server role) install in the system, they use OCF to POST their device information to the fire alarm control unit (OCF Client role) for adding device information in the system. In the fire alarm control unit, the resource is required to identify the fire zone ID and allocate it to each device. After mapping the device to the corresponding fire zone ID, the fire alarm control unit sends an OCF message to devices including the allocated fire zone ID. This ID is used by fire detection devices to send detection messages to notice the location of a fire, by the fire alarm control unit to determine the appropriate alarm devices for indicating residence in the building, and by the fire alarm devices to indicate information using sound or display.

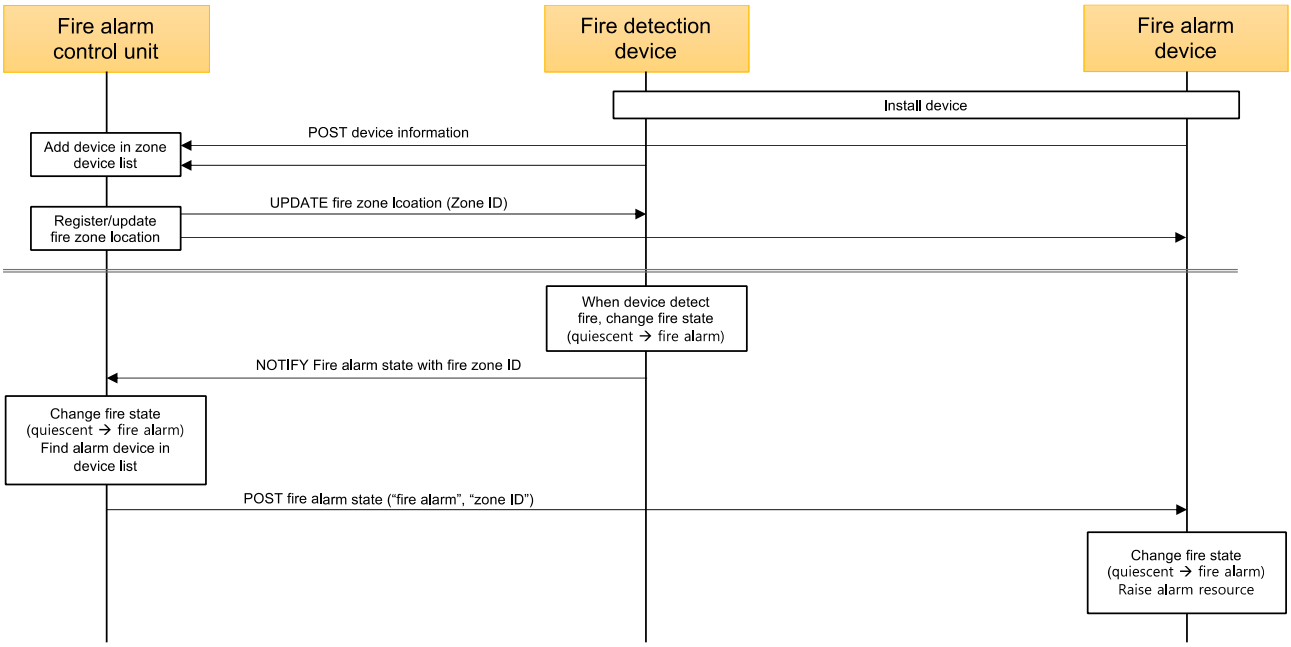

Figure F. 2 – Message call flow example for the fire alarm system

F.3 Standardized Device Types

OCF device types for the fire alarm system categorized into three Device Types; Fire alarm control unit, Fire detection and Fire alarm. The Device Type exposed by the "rt" value of /oic/d of all Fire alarm system Devices shall have a Resource Type value ("rt") prefixed with "oic.d.". Table F. 1 lists Device Type for the fire alarm control unit.

Table F. 1 – Fire alarm control unit device types

Device Name	Device Type (rt)	Required Resource Name	Required Resource Type
Fire Alarm Control Unit	oic.d.firealarmcontrolunit	Fire Zone location	oic.r.location.firezone
		Fire state	oic.r.fire.state
		Zone Device List	oic.r.zonedevicelist

Copyright Open Connectivity Foundation, Inc. © 2016-2023. All rights Reserved

Table F. 2 lists Fire detection Device Types. For fire detection, four types of devices are defined. Manual Call Point is used to initiate a fire signal by pressing simple switch or button with human intervention. Other devices use existing sensor resources to detect fire by monitoring heat, smoke and carbon monoxide.

Table F. 2 – List of Fire detection Device Types

Device Name	Device Type (rt)	Required Resource Name	Required Resource Type
Heat Detector	oic.d.heatdetector	Fire Zone location	oic.r.location.firezone
		Fire state	oic.r.fire.state
		Temperature	oic.r.temperature
		Value Conditional	oic.r.value.conditional
Smoke Detector	oic.d.smokedetector	Fire Zone location	oic.r.location.firezone
		Fire state	oic.r.fire.state
		Smoke sensor	oic.r.sensor.smoke
		Value Conditional	oic.r.value.conditional
Carbon Monoxide Detector	oic.d.carbonmonoxidedetector	Fire Zone location	oic.r.location.firezone
		Fire state	oic.r.fire.state
		Carbon monoxide sensor	oic.r.sensor.carbonmonoxide
		Value Conditional	oic.r.value.conditional
Manual Call Point	oic.d.manualcallpoint	Fire Zone location	oic.r.location.firezone
		Fire state	oic.r.fire.state
		Binary switch	oic.r.switch.binary

Table F. 3 lists Fire alarm Device Types. For fire alarm, five devices are defined. For fire alarm, devices use resource to play sound or light.

Copyright Open Connectivity Foundation, Inc. © 2016-2023. All rights Reserved

Table F. 3 – List of Fire alarm Device Types

Device Name	Device Type (rt)	Required Resource Name	Required Resource Type
Fire Bell	oic.d.firebell	Fire Zone location	oic.r.location.firezone
		Fire state	oic.r.fire.state
		Binary switch	oic.r.swtich.binary
Siren	oic.d.siren	Fire Zone location	oic.r.location.firezone
		Fire state	oic.r.fire.state
		Audio controls	oic.r.audio
Voice Indicator	oic.d.voiceindicator	Fire Zone location	oic.r.location.firezone
		Fire state	oic.r.fire.state
		Audio controls	oic.r.audio
		Media source list	oic.r.mediasourcelist
Emitting Light	oic.d.emittinglight	Fire Zone location	oic.r.location.firezone
		Fire state	oic.r.fire.state
		Emitting	oic.r.light.emitting
Alphanumeric Indicator	oic.r.alphanumericindicator	Fire Zone location	oic.r.location.firezone
		Fire state	oic.r.fire.state
		Media source list	oic.r.mediasourcelist

Copyright Open Connectivity Foundation, Inc. © 2016-2023. All rights Reserved